BUTTE COUNTY ASSOCIATION OF GOVERNMENTS
BUTTE REGIONAL TRANSIT OPERATIONS CENTER
TENANT IMPROVEMENT

326 HUSS LANE
CHICO, CA

BID SET

2013 California Green Building Standard Code (CGC)
Non Residential Checklist

Feature or Measure	Yes
SITE DEVELOPMENT (5.106)	
Short-Term bicycle parking. If the project is anticipated to generate visitor traffic, provide permanently anchored bicycle racks within 200 feet of the visitors' entrance, readily visible to passers-by, for 5 percent of visitor motorized vehicle parking capacity, with a minimum of one two-bike capacity rack per CGC 5.106.4.1.	☐
Long-Term bicycle parking. For buildings with over 10 tenant-occupants, provide secure bicycle parking for 5 percent of tenant-occupied motorized vehicle parking capacity, with a minimum of one space per CGC 5.106.4.2.	☐
Designated parking. Provide designated parking for any combination of low-emitting, fuel-efficient and carpool/van pool vehicles as shown in Table 5.106.5.2.	☐
Light pollution reduction. Comply with lighting power requirements in the *California Energy Code* and in compliance with CGC 5.106.8.	☐
WATER EFFICIENCY AND CONSERVATION	
INDOOR WATER USE (CGC 5.303)	
Meters. Separate meters shall be installed for the uses described in Sections 503.1.1 through 503.1.2.	
Buildings in excess of 50,000 square feet. Separate submeters shall be installed as follows:	
1. For each individual leased, rented or other tenant space within the building projected to consume more than 100 gal/day.	☐
2. For spaces used for laundry or cleaners, restaurant or food service, medical or dental office, laboratory or beauty salon or barber shop projected to consume more than 100 gal/day.	☐
Excess consumption. Any building within a project or space within a building that is projected to consume more than 1,000 gal/day.	☐
20 percent savings. A schedule of plumbing fixtures and fixture fittings that will reduce the overall use of potable water within the building by 20 percent shall be provided per CGC 5.303.2. (Calculate savings by Water Use Worksheets)	☐
Multiple showerheads serving one shower. When single shower fixtures are served by more than one showerhead, the combined flow rate of all the showerheads shall not exceed the maximum flow rates specified in the 20 percent reduction column contained in Table 5.303.2.3 or the shower shall be designed to only allow one showerhead to be in operation at a time (CGC 5.303.2.1).	☐
Wastewater reduction. Each building shall reduce the generation of wastewater by one of the methods per CGC 5.303.4:	☐
Plumbing fixtures and fittings. Plumbing fixtures (water closets and urinals) and fittings (faucets and showerheads) shall comply with the requirements listed for each type in Items listed in Table 5.303.6:	
1. Water closets (toilets) – flushometer valve type single or dual flush, maximum flush volume	☐
2. Water closets (toilets) – tank type	☐
3. Urinals, maximum flush volume	☐
4. Urinals, non-water urinals	☐
5. Public lavatory faucets : Maximum flow rate-0.5 gpm	☐
6. Public metering self-closing faucets : Maximum flow rate-0.25 gallon per cycle	☐
7. Residential bathroom lavatory sink faucets: Maximum flow rate-1.5 gpm	☐

OUTDOOR WATER USE (CGC 5.304)	
Water budget. A water budget shall be developed for landscape irrigation use per CGC 5.304.1.	☐
Outdoor potable water use. For new water service, separate meters or submeters shall be installed for indoor and outdoor potable water use for landscaped areas between 1,000 square feet and 5,000 square feet per CGC 5.304.2.	☐
Irrigation design. In new nonresidential projects with between 1,000 and 2,500 square feet of landscaped area (the level at which the MLO applies), install irrigation controllers and sensors which include the following criteria and meet manufacturer's recommendations CGC 5.304.3.	☐
Irrigation controllers. Automatic irrigation system controllers installed at the time of final inspection shall comply with CGC 5.304.3.1	☐
WEATHER RESISTANCE AND MOISTURE MANAGEMENT (CGC 5.407)	
Weather protection. Provide a weather-resistant exterior wall and foundation envelope as required by *California Building Code* Section 1403.2 and *California Energy Code* Section 150, manufacturer's installation instructions or local ordinance, whichever is more stringent.	☐
Moisture control. Employ moisture control measures by the following methods;	☐
Sprinklers. Prevent irrigation spray on structures per CGC 5.407.2.1.	☐
Entries and openings. Design exterior entries and openings to prevent water intrusion into buildings per CGC 5.407.2.2.	☐
CONSTRUCTION WASTE REDUCTION, DISPOSAL AND RECYCLING (CGC 5.408)	
Construction waste diversion. Comply with Solano County Construction and Demolition Debris Recycling Program	☐
Verification of compliance. A copy of the completed waste management report shall be provided.	☐
BUILDING MAINTENANCE AND OPERATION (CGC 5.410)	
Recycling by occupants. Provide readily accessible areas that serve the entire building and are identified for the depositing, storage and collection of nonhazardous materials for recycling per CGC 5.410.1	☐
Commissioning. For new buildings 10,000 square feet and over, building commissioning for all building systems covered by T24, Part 6, process systems and renewable energy systems shall be included in the design and construction processes of the building project. Commissioning requirements shall include items listed in Section 5.410.2.	☐
Commissioning report. A complete report of commissioning process activities undertaken through the design, construction and reporting recommendations for post-construction phases of the building project shall be completed and provided to the owner or representative.	☐
Testing and adjusting. Testing and adjusting of systems shall be required for buildings less than 10,000 square feet per CGC 5.410.4.	☐
Operation and maintenance manual. Provide the building owner with detailed operating and maintenance instructions and copies of guaranties/warranties for each system prior to final inspection per CBC 5.410.4.5.	☐
Inspections and reports. Include a copy of all inspection verifications and reports required by the enforcing agency.	☐
ENVIRONMENTAL QUALITY	
GAS FIREPLACES (CGC 5.503)	
Install only a direct-vent sealed-combustion gas or sealed wood-burning fireplace or a sealed woodstove and refer to residential requirements in the *California Energy Code,* Title 24, Part 6, Subchapter 7, Section 150. **Woodstoves.** Woodstoves shall comply with US EPA Phase II emission limits.	☐

POLUTANT CONTROL (CGC 5.504)	
Covering of duct openings and protection of mechanical equipment during construction. At the time of rough installation or during storage on the construction site and until final startup of the heating and cooling equipment, all duct and other related air distribution component openings shall be covered with tape, plastic, sheet metal or other methods acceptable to the enforcing agency to reduce the amount of dust or debris which may collect in the system per CGC 5.504.3.	☐
Finish material pollutant control. Finish materials shall comply with Sections 5.504.4.1 through 5.504.4.4.	☐
Adhesives, sealants, caulks. Adhesives and sealants used on the project shall meet the requirements of the standards listed in CGC 5.504.4.1.	☐
Paints and coatings. Architectural paints and coatings shall comply with Table 5.504.4.3 unless more stringent local limits apply.	☐
Verification. Verification of compliance with this section shall be provided at the request of the enforcing agency.	☐
Carpet systems. All carpet installed in the building interior shall meet the testing and product requirements of one of the standards listed in Section 5.504.4.4.	☐
Composite wood products. Hardwood plywood, particleboard and medium density fiberboard composite wood products used on the interior or exterior of the building shall meet the requirements for formaldehyde as specified in Table 5.504.4.5	☐
Resilient flooring systems. Comply with the VOC-emission limits defined in the 2009 CHPS criteria and listed on its Low-emitting Materials List (or Product Registry) or certified under the FloorScore program of the Resilient Floor Covering Institute.	☐
Verification of compliance. Documentation shall be provided verifying that resilient flooring materials meet the pollutant emission limits.	☐
Hazardous particulates and chemical pollutants. Minimize and control pollutant entry into buildings and cross-contamination of regularly occupied areas.	☐
Filters. In mechanically ventilated buildings, provide regularly occupied areas of the building with air filtration media for outside and return air prior to occupancy that provides at least a MERV of 8.	☐

Responsible Designer's Declaration Statement	Contractor Declaration Statement
I hereby certify that this project has been designed to meet the requirements of the 2013 California Green Building Standards Code.	I hereby certify, as the builder or installer under permit listed herein, that this project will be constructed to meet the requirements of the California Green Building Standards Code.
Name: JAY MONNIN	Name:
Signature:	Signature:
Date: 11/02/2015	Date:
Company: KITCHELL CEM	License:
Address: 2750 GATEWAY OAKS DRIVE, SUITE 300 SACRAMENTO, CA 95833	Address:

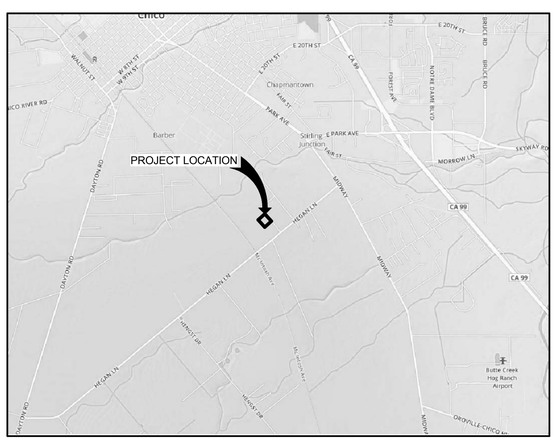

VICINITY MAP
NTS

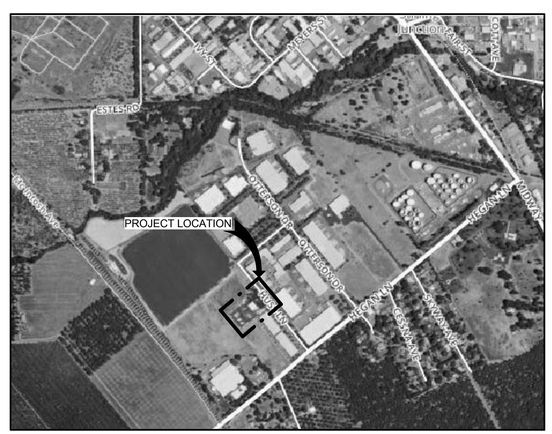

LOCATION MAP
NTS

PROJECT SCOPE

THIS PROJECT IS FOR THE RENOVATION OF THE EXISTING BUS MAINTENANCE AND TRANSIT OPERATIONS CENTER FOR THE BUTTE COUNTY ASSOCIATIONS OF GOVERNMENTS. THE SCOPE INCLUDES THE REMOVAL OF ALL EQUIPMENT AND NON-STRUCTURAL WALLS AT THE BUILDING INTERIOR AND THE REMOVAL OF ALL ROOF MOUNTED EQUIPMENT. NEW CONSTRUCTION INCLUDES NEW WALLS AND EQUIPMENT AS INDICATED ON THE PLANS. SITE WORK IS LIMITED TO WHAT IS DEPICTED ON THE PLANS, MOST SITE IMPROVEMENTS ARE TO OCCUR UNDER A SEPARATE PERMIT PRIOR TO THE RENOVATION OF THIS BUILDING.

CONSULTANT

KITCHELL CEM
2750 GATEWAY OAKS DR SUITE 300
SACRAMENTO, CA 95833

PH. 916.648.9700
FAX 916.648.6534

CONSTRUCTION MANAGER: RON DUEK
PROJECT ARCHITECT: JAY MONNIN, R.A.
STRUCTURAL ENGINEER: DANNY VANG, P.E.
MECHANICAL / PLUMBING ENGINEER: HENRY SAYARATH, P.E.
ELECTRICAL ENGINEER: MILUTIN BACKOVICH, P.E.

OWNER

BUTTE COUNTY ASSOCIATION OF GOVERNMENTS

2580 SIERRA SUNRISE TERRACE, SUITE #100
CHICO, CA 95928

CONTACT: ANDY NEWSUM - DEPUTY DIRECTOR
PH. 530.879.2468

SHEET INDEX

GENERAL
G001 COVER SHEET

ARCHITECTURE
A001 ARCHITECTURAL ABBREVIATIONS, SYMBOLS & NOTES
A002 CODE ANALYSIS - EGRESS DIAGRAM
A003 DETAIL SCHEDULE
A100 ARCHITECTURAL SITE PLAN
A101 ENLARGED SITE PLAN
AD201 DEMO FLOOR PLAN
AD230 DEMO ROOF PLAN
A201 FLOOR PLAN
A202 FLOOR PLAN - DIMENSIONS
A211 ENLARGED FLOOR PLANS
A221 REFLECTED CEILING PLAN
A222 ENLARGED CEILING PLAN
A223 CEILING CONNECTION DETAILS
A230 ROOF PLAN
A301 EXTERIOR ELEVATIONS
A401 BUILDING SECTIONS
A501 WALL SECTIONS & DETAILS
A601 SIGNAGE PLAN & ROOM FINISH SCHEDULE
A602 INTERIOR ELEVATIONS
A603 INTERIOR ELEVATIONS
A604 INTERIOR ELEVATIONS
A605 ARCHITECTURAL DETAILS
A610 RESTROOM ENLARGED PLANS & ELEVATIONS
A611 RESTROOM DETAILS
A701 WINDOW SCHEDULES & DETAILS
A702 DOOR SCHEDULES & DETAILS
A703 SIGNAGE DETAILS

STRUCTURAL
S001 STRUCTURAL ABBREVATIONS, SYMBOLS, & NOTES
S002 GENERAL NOTES AND TYPICAL DETAILS
S003 STRUCTURAL TYPICAL DETAILS
S004 STRUCTURAL TYPICAL DETAILS
S200 FOUNDATION PLAN & DETAILS
S210 ENLARGED PLATFORM / RAMP FRAMING PLAN & DETAILS
S220 PARTIAL CEILING FRAMING PLAN & DETAILS
S230 ROOF FRAMING PLAN & DETAILS

MECHANICAL
M001 MECHANICAL ABBREVIATIONS, SYMBOLS, & NOTES
M201 MECHANICAL PLAN
M202 MECHANICAL REFRIGERANT & CONDENSATE PLAN
M701 MECHANICAL DETAILS
M702 MECHANICAL DETAILS
M801 MECHANICAL SCHEDULES
M802 VRF SYSTEM PIPING DIAGRAM & SEQUENCE OF OPERATIONS
M803 VRF SYSTEM WIRING DIAGRAM
M901 MECHANICAL TITLE 24
M902 MECHANICAL TITLE 24
M903 MECHANICAL TITLE 24

ELECTRICAL
E001 ELECTRICAL ABBREVIATIONS, SYMBOLS, & NOTES
E100 ELECTRICAL SITE PLAN
E201 ELECTRICAL POWER PLAN
E202 ELECTRICAL LIGHTING PLAN
E203 ELECTRICAL DATA PLAN
E204 FIRE ALARM PLAN
E205 SECURITY & A/V PLANS
E501 ENLARGED POWER PLANS
E701 ELECTRICAL DETAILS
E801 ELECTRICAL SINGLE LINE DIAGRAM
E802 LOW VOLTAGE SINGLE LINE DIAGRAMS
E803 LIGHTING FIXTURES SCHEUDLE & SWITCHING DIAGRAM
E804 FIRE ALARM DIAGRAM, SCHEDULE & DETAILS
E805 ELECTRICAL PANEL SCHEDULES
E806 ELECTRICAL SCHEDULES
E901 ELECTRICAL TITLE 24
E902 ELECTRICAL TITLE 24

PLUMBING
P001 PLUMBING ABBREVIATIONS, SYMBOLS & NOTES
P201 PLUMBING FLOOR PLAN WITH PLUMBING FIXTURES LOCATED

KITCHELL
Capital Expenditure Managers
2750 Gateway Oaks Drive
Suite 300
Sacramento, CA. 95833
(916) 648-9700

BCAG BUTTE COUNTY ASSOCIATION OF GOVERNMENTS

BUTTE REGIONAL TRANSIT OPERATIONS CENTER
326 HUSS LANE, CHICO CA

BUTTE COUNTY ASSOCIATION OF GOVERNMENTS

PROJECT STATUS:
BID SET
BUILDINGS:

SHEET TITLE:
COVER SHEET

SCALE: 0 1/2 1 BAR IS ONE INCH ON ORIGINAL DRAWING. IF NOT ONE INCH ON THIS SHEET, ADJUST SCALES ACCORDINGLY

REVISIONS

No.	Description	Date

JOB NO. 5006A3
DATE 12/3/15
SHEET G001

LAST REVISION: 11/30/2015 2:00:06 PM

C:\BIM\BCAG TI_homberger.rvt

ARCHITECTURAL ABBREVIATIONS

SYMBOL	DESCRIPTION
ABV	ABOVE
ABC	ABOVE CEILING
AFF	ABOVE FINISHED FLOOR
ACC DR	ACCESS DOOR
ACC FL	ACCESS FLOOR
ACC PL	ACCESS PANEL
ACC	ACCESS
ACCES	ACCESSORIES
ACOUST	ACOUSTICAL
ACOUST INSUL	ACOUSTICAL INSULATION
ADD	ADDENDUM/ADDENDA
ADH	ADHESIVE
ADJ	ADJACENT
ADJST	ADJUSTABLE
ADMIN	ADMINISTRATION
AD SEG	ADMINISTRATIVE SEGREGATION
AGG	AGGREGATE
A/C	AIR CONDITIONING
AHU	AIR HANDLING UNIT
AB	ANCHOR BOLT
LL	ANGLE, LENGTH
L	ANGLE/LENGTH
@	AT
ANOD	ANODIZED
AD	AREA DRAIN
ASB	ASBESTOS
ASPH	ASPHALT
AC	ASPHALTIC CONCRETE
AT	ASPHALTIC TILE
A/V	AUDIO/VISUAL
AFS	AUTOMATIC FIRE SPRINKLER
BSMT	BASEMENT
BM	BEAM
BRG	BEARING
BEL	BELOW
BP	BENT PLATE
BET	BETWEEN
BEV	BEVELED
BITUM	BITUMINOUS
BLK	BLOCK
BLKG	BLOCKING
BD	BOARD
BS	BOTH SIDES
BW	BOTHWAYS/BARBED WIRE
BOT	BOTTOM
BRDG	BRIDGING
BRNZ	BRONZE
BUR	BUILT-UP ROOF
BG	BUMPER GUARD
CEM	BACKER BOARD
CAB	CABINET
CPT	CARPET
CSMT	CASEMENT
CIP	CAST IN PLACE
CI	CAST IRON
CLKG	CAULKING
CTR	CENTER
CL	CENTER LINE/CHAIN LINK
CC	CENTER TO CENTER
CMT	CERAMIC MOSAIC TILE
CT	CERAMIC TILE
CLF	CHAIN LINK FENCE
CH BD	CHALKBOARD
CH	CHANNEL
CP	CHECKERED PLATE
CIR	CIRCLE
CIRC	CIRCUMFERENCE
CO	CLEANOUT
COTG	CLEANOUT TO GRADE
CLR	CLEAR
CLO	CLOSET
CLS	CLOSURE
CRS	COARSE
CR	COLD ROLLED
CW	COLD WATER
COL	COLUMN
COMB	COMBINATION/COMBINE
COMM	COMMUNICATIONS
CONC	CONCRETE
CMU	CONCRETE MASONRY UNIT
CONF	CONFERENCE
CONN	CONNECT/CONNECTION
CJ	CONSTRUCTION JOINT
COREBD	COREBOARD
CG	CORNER GUARD
CORR	CORRUGATED
CNTR	COUNTER
C FLASH	COUNTER FLASHING
CTSK	COUNTERSINK
CRG	CROSS GRAIN
CU	COPPER
CUST	CUSTODIAN
CYL	CYLINDER

SYMBOL	DESCRIPTION
DPF	DAMPROOFING
DP	DEEP/DEPTH
DEMO	DEMOLISH/DEMOLITION
DMT	DEMOUNTABLE
DEP	DEPRESSED/DEPRESSION
DF	DRINKING FOUNTAIN
DA	DISABLED ACCESS
DISP	DISPENSER
DIV	DIVISION
DR	DOOR
DL	DOOR LOUVER
DO	DOOR OPENING
DBL	DOUBLE
DH	DOUBLE HUNG
DS	DOWNSPOUT
DWR	DRAWER
DWG	DRAWING
DW	DUMBWAITER
EW	EACH WAY
EP	EDGE OF PAVEMENT
ELEC	ELECTRICAL
EPNL	ELECTRICAL PANELBOARD
EWC	ELECTRICAL WATER COOLER
EWH	ELECTRICAL WATER HEATER
ELEV	ELEVATION
ELV	ELEVATOR
EMER	EMERGENCY
ENCL	ENCLOSURE
EQUIP	EQUIPMENT
EQ	EQUAL
ENT	ENTRANCE
ESC	ESCAPE
EXC	EXCAVATE
EF	EXHAUST FAN
(E)	EXISTING
EXP	EXPANSION
EB	EXPANSION BOLT
EJ	EXPANSION JOINT
ES	EXPANSION SHIELD
EXP	EXPOSED
EXT	EXTERIOR
EIFS	EXTERIOR INSULATION & FINISH SYSTEM
FAB	FABRICATE
FoB	FACE OF BRICK
FoC	FACE OF CONCRETE
FoM	FACE OF MASONRY
FoP	FACE OF PANEL
FoS	FACE OF STUD
FoW	FACE OF WALL
FAS	FASTEN
FEN	FENCE
FBD	FIBERBOARD
FGL	FIBERGLASS
FIN	FINISH
FO	FINISH OPENING
FF	FINISHED FLOOR
FF&E	FURNITURE, FIXTURES AND EQUIPMENT
FFE	FINISHED FLOOR ELEVATION
FG	FINISHED GRADE
FA	FIRE ALARM
FE	FIRE EXTINGUISHER
FEC	FIRE EXTINGUISHER CABINET
FHC	FIRE HOSE CABINET
FRP	FIBER GLASS REINFORCED PANELING
FRT	FIRE RETARDANT
FP	FIREPROOFING
FIXT	FIXTURE
FLSHG	FLASHING
FB	FLAT BAR
FHMS	FLAT-HEAD MACHINE SCREW
FHWS	FLAT-HEAD WOOD SCREW
FL CO	FLOOR CLEAN-OUT
FD	FLOOR DRAIN
FS	FLOOR SINK
FLR	FLOOR/FLOORING
FLUOR	FLUORESCENT
FTG	FOOTING
FND	FOUNDATION
FRG	FURRING
FURN	FURNITURE
GALV	GALVANIZED
GI	GALVANIZED IRON
GSM	GALVANIZED SHEET METAL
GA	GAUGE
GEN	GENERAL
GL	GLASS
GB	GRAB BAR
GR	GRADE
GSF	GROSS SQUARE FEET
GND	GROUND
GT	GROUT
G	GUTTER
GWB	GYPSUM WALL BOARD

SYMBOL	DESCRIPTION
HBD	HARDBOARD
HDWR	HARDWARE
HDWD	HARDWOOD
HD	HEAD/HEAVY DUTY
HDR	HEADER
HTG	HEATING
HVAC	HEATING VENTILATING AIR CONDITIONING
HT	HEIGHT
HP	HORSE POWER
HPT	HIGH POINT
HC	HOLLOW CORE/HANDICAP
HM	HOLLOW METAL
HK	HOOK
HORIZ	HORIZONTAL
HB	HOSE BIBB
HR	HOSE RACK/HOUR/HANDRAIL
HW	HOT WATER
ID	INSIDE DIAMETER
INSUL	INSULATION
INT	INTERIOR
ISA	INTERNATIONAL SYMBOL OF ACCESSIBILITY
INV	INVERT
IE	INVERT ELEVATION
JAN	JANITOR
JT	JOINT
JST	JOIST
KP	KICK PLATE
KIT	KITCHEN
KE	KITCHEN EQUIPMENT
KO	KNOCKOUT
LBL	LABEL
LAD	LADDER
LB	LAG BOLT/POUND
LAM	LAMINATE
LAV	LAVATORY
LH	LEFT HAND
LT	LIGHT
LSD	LIQUID SOAP DISPENSER
LKR	LOCKER
LONG	LONGITUDINAL
LVR	LOUVER
LPT	LOW POINT
MACH	MACHINE
MB	MACHINE BOLT
MS	MACHINE SCREW
MAINT	MAINTENANCE
MH	MANHOLE
MSG	MANUFACTURER'S STANDARD GRADE
MK	MARK
MU	MASONRY UNIT
MO	MASONRY OPENING
ML	MATCHLINE
MC	MEDICINE CABINET
MEM	MEMBRANE
MTL	METAL
MCB	METAL CASING BEAD
MFD	METAL FLOOR DECKING
MF	METAL FLOORING
MRD	METAL ROOF DECK
MT	METAL THRESHOLD
MEZZ	MEZZANINE
MSBG	MILD STEEL BARRIER GRILLE
MWK	MILLWORK
MIR	MIRROR
MR	MOISTURE RESISTANT
MLDG	MOULDING
MTD	MOUNTED
MTG	MEETING
MOV	MOVABLE
MULL	MULLION
MULTI	MULTIPLE
MUNI	MUNICIPAL
(N)	NEW
NR	NOISE REDUCTION
NRC	NOISE REDUCTION COEFFICIENT
NC	NON-COMBUSTIBLE
NSG	NON-SECURITY GLASS
OC	ON CENTER
OPNG	OPENING
OWJ	OPEN-WEB JOIST
OPP	OPPOSITE
OP H	OPPOSITE HAND
OP S	OPPOSITE SURFACE
OD	OUTSIDE DIAMETER
OA	OVERALL
OF	OVERFLOW
OH	OVERHEAD
OFOI	OWNER FURNISHED, OWNER INSTALLED

SYMBOL	DESCRIPTION
PNT	PAINT
PR	PAIR
PNL	PANEL
PB	PANIC BAR
PTD	PAPER TOWEL DISPENSER
PBD	PARTICLE BOARD
PTN	PARTITION
PVMT	PAVEMENT
PV	PHOTO VOLTAIC
d	PENNY (NAIL SIZE)
PERIM	PERIMETER
PERP	PERPENDICULAR
PLAS	PLASTER
PLAM	PLASTIC LAMINATE
PL	PLATE
PG	PLATE GLASS
PLBG	PLUMBING
PLYWD	PLYWOOD
PCKT(S)	POCKET(S)
PT	POINT
POL	POLISHED
PVC	POLYVINYL CHLORIDE
PCP	PORTLAND CEMENT PLASTER
PTC	POST-TENSIONED CONCRETE
PCF	POUNDS PER CUBIC FOOT
PSF	POUNDS PER SQUARE FOOT
PSI	POUNDS PER SQUARE INCH
PCC	PRECAST CONCRETE
PFN	PREFINISHED
PRF	PREFORMED
PREP	PREPARATION
PSC	PRESTRESSED CONCRETE
PL, P/L	PROPERTY LINE
PROT	PROTECTED/PROTECTION
QT	QUARRY TILE
R	RADIUS/RISER
RWL	RAIN WATER LEADER
RECEP	RECEPTACLE
REC	RECESSED
RWD	REDWOOD
RE	REFERENCE
REFL	REFLECTED
REF	REFRIGERATOR
RCP	REINFORCED CONCRETE PIPE
REINF	REINFORCED/REINFORCING
REM	REMOVE
RESIL	RESILIENT
RA	RETURN AIR
RAG	RETURN AIR GRILLE
REV	REVERSE/REVISION
RH	RIGHT HAND
ROW	RIGHT OF WAY
RD	ROOF DRAIN
RH	ROOF HATCH
RM	ROOM
RO	ROUGH OPENING/ROUGH
RND	ROUND
RHWS	ROUND HEAD WOOD SCREWS
RB	RUBBER BASE
SP	SALLY PORT
SAN	SANITARY
SND	SANITARY NAPKIN DISPOSAL
SNV	SANITARY NAPKIN VENDOR
SS	SANITARY SEWER
SCR	SCREEN
SCUP	SCUPPER
SECT	SECTION
SEC	SECURITY
SGL	SECURITY GLASS/SINGLE
SHM	SECURITY HOLLOW METAL
STH	SECURITY TOILET PAPER HOLDER
SSD	SEE STRUCTURAL DRAWINGS
SEG	SEGREGATION
SDS	SELF DRILLING SCREW
SEP	SEPARATION
SVC	SERVICE
SSK	SERVICE SINK
SHTG	SHEATHING
SHT	SHEET
SM	SHEET METAL
SMS	SHEET METAL SCREW
SH(S)	SHELF/SHELVES
SHWR	SHOWER
SK	SINK
SLP	SLOPE
SD	STORM DRAIN
SC	SOLID CORE/SCALE
STAG	STAGGERED
SST	STAINLESS STEEL
STIFF	STIFFENER
STOR	STORAGE
SA	SUPPLY AIR
S4S	SURFACED FOUR SIDES
S2S	SURFACED TWO SIDES
SUSP	SUSPENDED

SYMBOL	DESCRIPTION
TK BD	TACKBOARD
TV	TELEVISION
TEMP	TEMPERED
TECH	TECHNICAL
TB	TERMINATION BAR
TER	TERRAZZO
THERM	THERMAL
THR	THRESHOLD
TPH	TOILET PAPER HOLDER
TSCD	TOILET SEAT COVER DISPENSER
T&G	TONGUE AND GROOVE
TRBG	TOOL RESISTANT BARRIER GRILLE
TJ	TOOLED JOINT
T&B	TOP AND BOTTOM
TOC	TOP OF CONCRETE/CURB
TOP	TOP OF PAVING
TOS	TOP OF STEEL
TOW	TOP OF WALL
TR	TRANSOM
TRANSV	TRANSVERSE
TRD	TREAD
TS	TUBE STEEL
UC	UNDERCUT
UL	UNDERWRITER'S LABORATORY
UNIF	UNIFORM
UON	UNLESS OTHERWISE NOTED
UR	URINAL
UTIL	UTILITY
VA	VACUUM ADHERED
VNR	VENEER
VTR	VENT THROUGH ROOF
VENT	VENTILATOR/VENTILATION
VIF	VERIFY IN FIELD
VEST	VESTIBULE
VB	VINYL BASE
VCT	VINYL COMPOSITION TILE
VF	VINYL FABRIC
VJ	V-JOINT
VOL	VOLUME
WSCT	WAINSCOT
WTW	WALL TO WALL
WC	WATER CLOSET
WH	WATER HEATER
WR	WATER RESISTANT/WASTE RECEPTACLE
WS	WATERSTOPS
WWF	WELDED WIRE FABRIC
WWM	WELDED WIRE MESH
WB	WHEEL BUMPER
WDW	WINDOW
WF	WIRE FLANGE BEAM
WG	WIREGLASS
WD	WOOD
WD B	WOOD BASE
WP	WORKING POINT/WATERPROOF
WI	WROUGHT IRON
XE	XENON

ARCHITECTURAL MATERIALS

SYMBOL	DESCRIPTION
	EARTH
	ROCK FILL
	SAND / MORTAR / PLASTER / GROUT
	CAST IN PLACE, PRECAST OR INFILL CONCRETE
	CMU WALL
	STEEL
	WOOD FINISH
	WOOD FRAMING THRU MEMBER
	WOOD FRAMING INTERRUPTED MEMBER
	PLYWOOD
	ACOUSTIC TILE OR BOARD
	GYPSUM BOARD OMIT DOUBLE LINES AT SMALL SCALE
	BATT INSULATION
	RIGID INSULATION
	CERAMIC TILE
	CEMENTITIOUS BACKER BOARD
	GLASS (OMIT LINES AT SMALL SCALE)
	GLASS / PLASTIC (ELEVATION)

ARCHITECTURAL SYMBOLS

DESCRIPTION	SYMBOL	
NORTH ARROW	N	
MATCH LINE	1 / A101A 1 / A101B	VIEW NUMBER / SHEET NUMBER SHADED PORTION IS SIDE CONSIDERED
DATUM HEIGHT		
GRID LINES	0.0 0.0	
BUILDING SECTION	X XXXX	SECTION IDENTIFIER SHEET NUMBER
WALL SECTION	X XXXX	SECTION IDENTIFIER SHEET NUMBER
DETAIL SECTION	1 XXXX	SECTION IDENTIFIER SHEET NUMBER
BUILDING ELEVATION	1 / 4 XXXX 2 / 3	VIEW NUMBER(S) SHEET NUMBER
INTERIOR ELEVATION	1 / 4 XXXX 2 / 3	VIEW NUMBER(S) SHEET NUMBER
INTERIOR EQUIPMENT ELEVATION	1 / 4 XXXX 2 / 3	VIEW NUMBER(S) SHEET NUMBER
ROOM TAG	ROOM NAME 101	ROOM NAME ROOM NUMBER
VIEW REFERENCE	1 XXXX	VIEW NUMBER SHEET NUMBER

DESCRIPTION	SYMBOL
INTERNATIONAL SYMBOL OF ACCESSIBILITY	
KEYNOTE TAG	XX XX
DOOR TAG	101
WINDOW TAG	2
WALL TAG	A
EQUIPMENT TAG	C1045802
LIMIT OF WORK	
CHAIN LINK FENCE	
LOUVER TAG	10
INSTALLATION SIDE FOR GLAZING STOPS	
FIRE DEPARTMENT CONNECTION	
FIRE EXTINGUISHER	SURFACE BRACKET SURFACE CABINET SEMI-RECESSED RECESSED

GENERAL NOTES:

1. DIMENSIONS ARE TO FACE OF CONCRETE OR FACE OF STUD, UNLESS OTHERWISE NOTED.
2. IN THE EVENT THAT CERTAIN DETAILS OF THE CONSTRUCTION ARE NOT FULLY SHOWN OR NOTED IN THESE DRAWINGS OR CALLED FOR IN THE SPECIFICATIONS, THEIR CONSTRUCTION SHALL BE OF THE SAME CHARACTER AND SIZE AS SIMILAR TO EXISTING CONDITIONS.
3. CONTRACTOR TO CHECK AND VERIFY ALL DIMENSIONS AND CONDITIONS AT JOB SITE AND NOTIFY ARCHITECT OF ANY DISCREPANCIES BETWEEN DRAWINGS AND FIELD CONDITIONS BEFORE COMMENCING WITH ANY WORK.
4. ARCHITECTS DOCUMENTS ARE TO CONVEY CONSTRUCTABILITY, SCOPE AND DESIGN INTENT. CONTRACTOR ACCEPTS FULL RESPONSIBILITY FOR ACCURACY AND IMPLEMENTATION ACCORDING TO STANDARDS OF ABILITY.
5. CONTRACTOR SHALL BE RESPONSIBLE FOR UNDERSTANDING ARCHITECTS DOCUMENTS.
6. ALL OSHA, STATE COUNTY AND LOCAL REGULATIONS ARE TO BE STRICTLY ENFORCED.
7. CONTRACTOR SHALL COORDINATE ALL UTILITY DISCONNECTS WITH EACH UTILITY PROVIDER AND OWNER'S REPRESENTATIVE.
8. THE CONTRACTOR SHALL PROVIDE AN ALTERNATE ACCESSIBLE ROUTE FOR PERSONS WITH DISABILITIES AROUND CONSTRUCTION AREAS, INCLUDING DIRECTIONAL SIGNAGE.

KITCHELL
Capital Expenditure Managers
2750 Gateway Oaks Drive
Suite 300
Sacramento, CA. 95833
(916) 648-9700

BCAG BUTTE COUNTY ASSOCIATION OF GOVERNMENTS

BUTTE REGIONAL TRANSIT OPERATIONS CENTER
326 HUSS LANE, CHICO CA

BUTTE COUNTY ASSOCIATION OF GOVERNMENTS

PROJECT STATUS:

BID SET

BUILDINGS:

SHEET TITLE:

ARCHITECTURAL ABBREVIATIONS, SYMBOLS & NOTES

SCALE: 0 1/2 1 BAR IS ONE INCH ON ORIGINAL DRAWING. IF NOT ONE INCH ON THIS SHEET, ADJUST SCALES ACCORDINGLY

REVISIONS

No.	Description	Date

JOB NO. 5006A3

DATE 12/3/15

SHEET A001

LAST REVISION: 11/30/2015 1:58:59 PM

C:\BIM\BCAG TI_hornberger.rvt

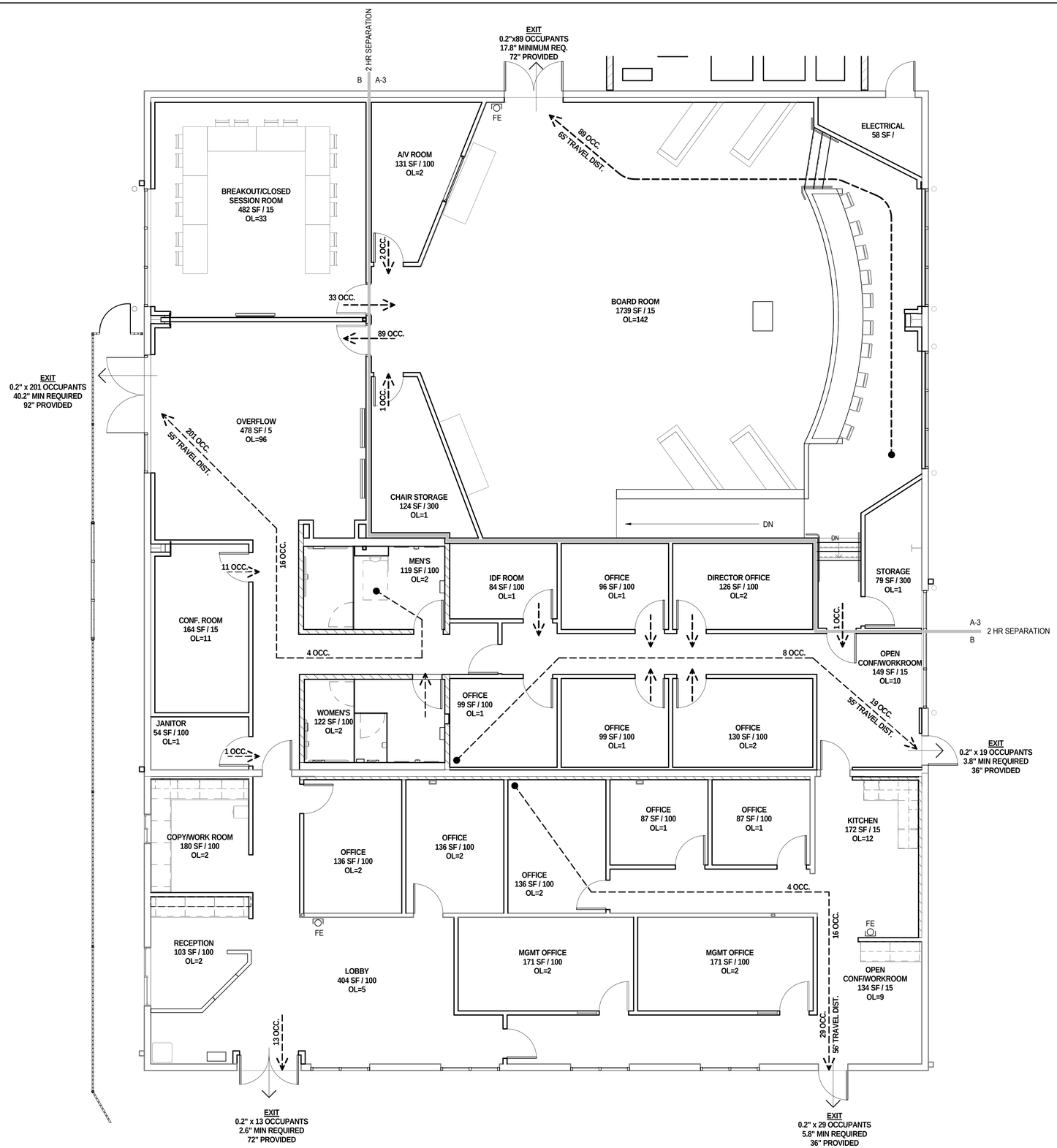

1 EGRESS PLAN
3/16" = 1'-0"

CODE ANALYSIS

PROJECT DESCRIPTION: RENOVATION OF THE EXISTING BUS MAINTENANCE AND TRANSIT OPERATIONS CENTER FOR THE BUTTE COUNTY ASSOCIATIONS OF GOVERNMENTS. THE SCOPE INCLUDES THE REMOVAL OF ALL EQUIPMENT AND NON-STRUCTURAL WALLS AT THE BUILDING INTERIOR AND THE REMOVAL OF ALL ROOF MOUNTED EQUIPMENT. NEW CONSTRUCTION INCLUDES NEW WALLS AND EQUIPMENT AS INDICATED ON THE PLANS. SITE WORK IS LIMITED TO WHAT IS DEPICTED ON THE PLANS, MOST SITE IMPROVEMENTS ARE TO OCCUR UNDER A SEPARATE PERMIT PRIOR TO THE RENOVATION OF THIS BUILDING.

GOVERNING CODES AND REGULATIONS:
CALIFORNIA BUILDING CODE (CBC)
CALIFORNIA CODE OF REGULATIONS TITLE 19
PUBLIC SAFETY, STATE FIRE MARSHAL REGULATIONS
CALIFORNIA CODE OF REGULATIONS TITLE 24

PART 1	2013	BUILDING STANDARDS ADMINISTRATIVE CODE
PART 2	2013	CALIFORNIA BUILDING CODE VOLS. 1 & 2 (2012 IBC AS AMENDED BY CA)
PART 3	2013	CALIFORNIA ELECTRICAL CODE (2008 NEC AS AMENDED BY CA)
PART 4	2013	CALIFORNIA MECHANICAL CODE (2009 UMC AS AMENDED BY CA)
PART S	2013	CALIFORNIA PLUMBING CODE (2009 UPC AS AMENDED BY CA)
PART 9	2013	CALIFORNIA FIRE CODE (2009 IFC AS AMENDED BY CA)
PART 11	2013	CALIFORNIA GREEN BUILDING STANDARDS CODE (CALGreen)
PART 12	2013	CALIFORNIA REFERENCED STANDARDS

PARTIAL LIST OF APPLICABLE STANDARDS

NFPA 72	NATIONAL FIRE ALARM CODE (CA AMENDED)	2013 EDITION
NFPA 80	FIRE DOOR AND OTHER OPENING PROTECTIVES	2013 EDITION

BUILDING OCCUPANCY CLASSIFICATION AND USE (CBC CHAPTER 3): B / A-3

CBC 304 B: OFFICE
CBC 303.4 A-3: BOARD ROOM / ASSEMBLY

GENERAL BUILDING HEIGHTS AND AREAS (CBC CHAPTER 5): MIXED OCCUPANCY BUILDING WITH INCIDENTAL USES

MAXIMUM ALLOWABLE AREA: B OCCUPANCY / TYPE VB = 9,000 SF

REQUIRED SEPARATIONS (CBC TABLE 508.4): A / B, NON-SPRINKLERED - **2HR**

TYPE OF CONSTRUCTION (CBC CHAPTER 6): TABLE 601 TYPE OF CONSTRUCTION: TYPE VB

BUILDING ELEMENT		
PRIMARY STRUCTURAL FRAME:		0
BEARING WALLS:	EXTERIOR:	N/A
	INTERIOR:	N/A
NON-BEARING WALLS AND PARTITIONS, EXTERIOR: (TABLE 602, FIRE SEPARATION = 10 ≤ x < 30)		0
NON-BEARING WALLS AND PARTITIONS, INTERIOR:		0
FLOOR CONSTRUCTION AND SECONDARY MEMBERS (CBC SEC 202):		0
ROOF CONSTRUCTION AND SECONDARY MEMBERS (CBC SEC 202):		0

OPENING FIRE PROTECTION (TABLE 716.5): 2HR WALL - MINIMUM FIRE DOOR RATING - 1.5 HR
GLAZING MARKING - >100 SQ IN = D-H-W-90

FIRE PROTECTION SYSTEMS (CHAPTER 9): FIRE ALARM SYSTEM: SHALL BE PROVIDED IN ACCORDANCE WITH SECTION 907.1

AUTOMATIC FIRE SPRINKLER SYSTEM: NOT REQUIRED PER SECTION 903.2.1.3

CBC 906.3(1) PORTABLE FIRE EXTINGUISHERS (LOW HAZARD) : MINIMUM NUMBER REQUIRED: 3
MAX DISTANCE TO EXTINGUISHER :75FT

CBC 1005.3.2 OTHER EGRESS COMPONENTS:

THE CAPACITY, IN INCHES, OF MEANS OF EGRESS COMPONENTS OTHER THAN STAIRWAYS SHALL BE CALCULATED BY MULTIPLYING THE OCCUPANT LOAD SERVED BY SUCH COMPONENT BY A MEANS OF EGRESS CAPACITY FACTOR OF 0.2 INCH PER OCCUPANT.

CBC 1014.3 TABLE 1014.3 EXIT ACCESS AND COMMON PATH OF EGRESS TRAVEL:
1. B OCCUPANCY: 100 FEET

CBC 1015 TABLE 1015.1 TWO EXITS OR EXIT ACCESS DOORWAYS FROM ANY SPACE SHALL BE PROVIDED WHERE OCCUPANT LOAD EXCEEDS:
1. B OCCUPANCY: 49 OCCUPANTS
2. A-3 OCCUPANCY: 49 OCCUPANTS

CBC 1016 TABLE 1016.2 EXIT ACCESS TRAVEL DISTANCE SHALL NOT EXCEED THE VALUES SHOWN IN TABLE 1016.2:

EXIT AND EXIT ACCESS DOORWAYS:
1. B OCCUPANCY: 200 FEET
2. A-3 OCCUPANCY: 200 FEET

KITCHELL
Capital Expenditure Managers
2750 Gateway Oaks Drive
Suite 300
Sacramento, CA. 95833
(916) 648-9700

BCAG BUTTE COUNTY ASSOCIATION OF GOVERNMENTS

BUTTE REGIONAL TRANSIT OPERATIONS CENTER
326 HUSS LANE, CHICO CA

BUTTE COUNTY ASSOCIATION OF GOVERNMENTS

PROJECT STATUS:
BID SET
BUILDINGS:

SHEET TITLE:
CODE ANALYSIS - EGRESS DIAGRAM

SCALE: 0 1/2 1 BAR IS ONE INCH ON ORIGINAL DRAWING. IF NOT ONE INCH ON THIS SHEET, ADJUST SCALES ACCORDINGLY

REVISIONS

No.	Description	Date

JOB NO. 5006A3
DATE 12/3/15
SHEET A002

C:\BIM\BCAG TI_hornberger.rvt

LAST REVISION: 11/30/2015 1:59:01 PM

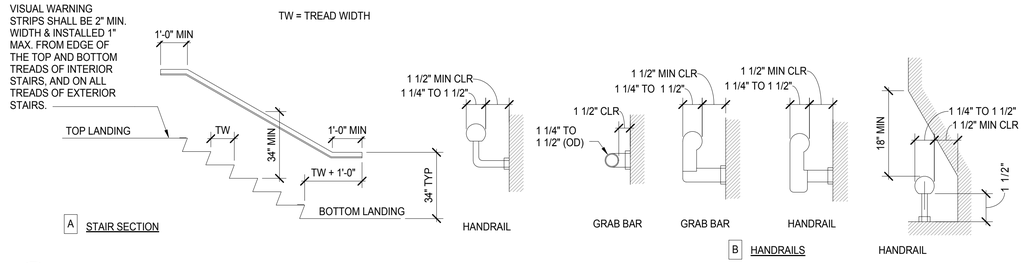

6 ADA HANDRAIL / GUARDRAIL
3/32" = 1'-0"

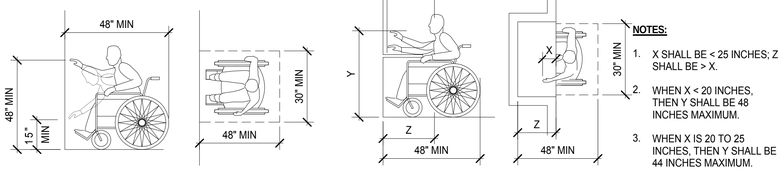

NOTES:

1. X SHALL BE < 25 INCHES; Z SHALL BE > X.
2. WHEN X < 20 INCHES, THEN Y SHALL BE 48 INCHES MAXIMUM.
3. WHEN X IS 20 TO 25 INCHES, THEN Y SHALL BE 44 INCHES MAXIMUM.

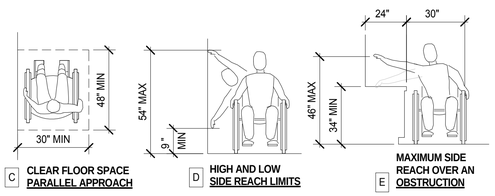

7 ADA REACH REQUIREMENTS
1/8" = 1'-0"

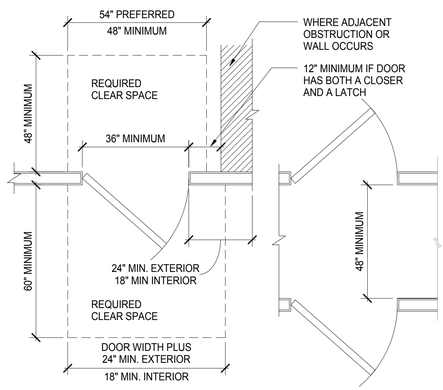

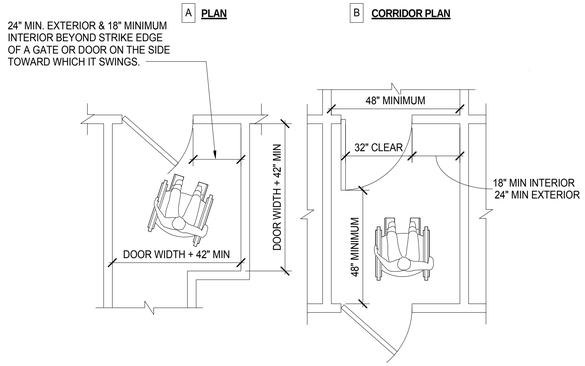

NOTES:

1. CLEAR SPACES MUST BE LEVEL TO PREVENT WHEELCHAIRS FROM ROLLING WHEN THE OCCUPANT RELEASES THE WHEEL GRIPS TO REACH FOR THE DOOR. 1/4" PER FOOT IS ALLOWED FOR DRAINAGE.
2. WHERE DOORS OPEN ONTO, BUT NOT INTO A CORRIDOR, THE REQUIRED LEVEL AREA BEYOND THE DOORS MAY BE A MINIMUM OF 48". FOR ADDITIONAL INFORMATION, SEE APPLICABLE NOTES ON TYPICAL ACCESSIBILITY NOTES SHEET.

8 ADA DOOR CLEARANCES
1/8" = 1'-0"

5 ADA SIGNS / PICTOGRAMS
1/8" = 1'-0"

LETTERS AND NUMBERS:

1. LETTERS AND NUMBERS ON SIGNS SHALL BE RAISED 1/32" MINIMUM AND SHALL BE SANS-SERIF UPPERCASE CHARACTERS ACCOMPANIED BY GRADE 2 BRAILLE.
2. RAISED CHARACTERS OR SYMBOLS SHALL BE A MINIMUM OF 5/8" HIGH.
3. PICTORIAL SYMBOL SIGNS (PICTOGRAMS) SHALL BE ACCOMPANIED BY THE EQUIVALENT VERBAL DESCRIPTION PLACED DIRECTLY BELOW THE PICTOGRAM. THE BORDER DIMENSION OF THE PICTOGRAM SHALL BE A MINIMUM OF 6" IN HEIGHT.
4. LETTERS AND NUMBERS ON SIGNS SHALL HAVE A WIDTH-TO-HEIGHT RATIO OF BETWEEN 3:5 AND 1:1 AND A STROKE WIDTH-TO-HEIGHT RATIO BETWEEN 1:5 AND 1:10.
5. CHARACTERS AND SYMBOLS SHALL CONTRAST WITH THEIR BACKGROUND, EITHER LIGHT CHARACTERS ON A DARK BACKGROUND OR DARK CHARACTERS ON A LIGHT BACKGROUND.
6. CHARACTERS AND NUMBERS ON SIGNS SHALL BE SIZED ACCORDING TO THE VIEWING DISTANCE FROM WHICH THEY ARE TO BE READ. THE MINIMUM HEIGHT IS MEASURED USING AN UPPER CASE X. LOWER CASE CHARACTERS ARE PERMITTED. FOR SIGNS SUSPENDED OR PROJECTED ABOVE THE FINISH FLOOR IN COMPLIANCE WITH SECTION 1121B, THE MINIMUM CHARACTER HEIGHT SHALL BE 3".
7. CONTRACTED GRADE 2 BRAILLE SHALL BE USED WHEREVER BRAILLE SYMBOLS ARE SPECIFICALLY REQUIRED IN OTHER PORTIONS OF THESE REGULATIONS. DOTS SHALL BE 1/10" ON CENTERS IN EACH CELL WITH 2/10" SPACE BETWEEN CELLS. DOTS SHALL BE RAISED A MINIMUM OF 1/40" ABOVE THE BACKGROUND.

SIGN LOCATIONS:

1. ALL BUILDING ENTRANCES THAT ARE ACCESSIBLE TO AND USABLE BY PERSONS WITH DISABILITIES AND AT EVERY MAJOR JUNCTION ALONG OR LEADING TO AN ACCESSIBLE ROUTE OF TRAVEL SHALL BE IDENTIFIED WITH A SIGN DISPLAYING THE INTERNATIONAL SYMBOL OF ACCESSIBILITY AND WITH ADDITIONAL DIRECTIONAL SIGNS, AS REQUIRED, TO BE VISIBLE TO PERSONS ALONG APPROACHING PEDESTRIAN WAYS.
2. WHEN PERMANENT IDENTIFICATION IS PROVIDED FOR ROOMS AND SPACES, RAISED LETTERS SHALL BE PROVIDED AND SHALL BE ACCOMPANIED BY BRAILLE IN CONFORMANCE WITH SECTION 1117B.5.6. SIGNS SHALL BE INSTALLED ON THE WALL ADJACENT TO THE LATCH OUTSIDE OF THE DOOR. WHERE THERE IS NO WALL SPACE ON THE LATCH SIDE, INCLUDING AT LEAF DOORS, SIGNS SHALL BE PLACE ON THE NEAREST ADJACENT WALL, PREFERABLY ON THE RIGHT. MOUNTING HEIGHT SHALL BE 60" ABOVE THE FINISH FLOOR TO THE CENTERLINE OF THE SIGN. MOUNTING LOCATION SHALL BE DETERMINED SO THAT THE PERSON MAY APPROACH WITHIN 3" OF THE SIGNAGE WITHOUT ENCOUNTERING PROTRUDING OBJECTS OR STANDING WITHIN THE SWING OF A DOOR.
3. ADDITIONAL DIRECTIONAL SIGNS ALONG ACCESSIBLE PATH OF TRAVEL ARE REQUIRED.
4. BUILDINGS REMODELED TO PROVIDE ACCESSIBLE SANITARY FACILITIES FOR PUBLIC USE SHALL HAVE INFORMATION POSTED IN THE LOBBY AS PART OF THE BUILDING DIRECTORY.

INTERNATIONAL SYMBOL OF ACCESSIBILITY:

1. STANDARD USED TO IDENTIFY ACCESSIBLE FACILITIES.
2. WHITE FIGURE ON BLUE BACKGROUND, COLOR # 15090 ON FEDERAL STANDARD # 595A.
3. WHEN ENFORCING AGENCY DETERMINES, IF APPROPRIATE, SPECIAL DESIGNS AND COLORS MAY BE APPROVED.

BRAILLE:

1. USE CONTRASTED GRADE 2 BRAILLE. DOTS TO BE 0.1 INCH ON CENTER IN EACH CELL.
2. 0.2 INCH SPACE BETWEEN CELLS.
3. DOTS RAISED MINIMUM 0.025 INCH ABOVE BACKGROUND.
4. SEE 4/T-4 FOR MORE INFO.

* FOR TYPICAL RESTROOM MOUNTING HEIGHTS SEE A611

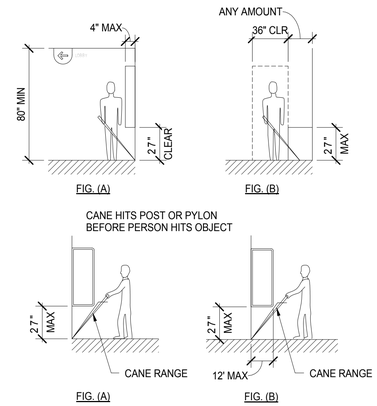

4 ADA PROTRUDING OBJECTS
1/8" = 1'-0"

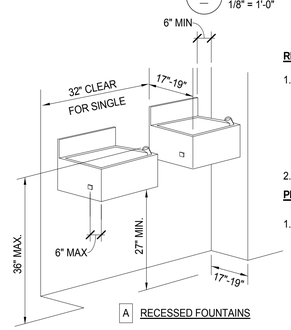

RECESSED FOUNTAINS:

1. WITHIN ALCOVES MINIMUM 63" WIDE, MINIMUM 18" DEEP WHEN DOUBLE DRINKING FOUNTAINS ARE REQUIRED AND 32" MIN. CLR. WHEN A SINGLE FOUNTAIN IS PERMITTED.
   A. CONTRACTOR SHALL COORDINATE WITH SIZE OF WATER FOUNTAIN TO BE USED AND SIZE ALCOVE ACCORDINGLY COMPLYING WITH REQUIREMENTS AND RECOMMENDATIONS AND COORDINATING WITH THE ARCHITECT
2. SEE TYPICAL ACCESSIBILITY NOTES SHEET SECTIONS "R" & "U".

PROJECTED FOUNTAINS:

1. WARNING FOR THE VISION IMPAIRED AT A PROJECTED DRINKING FOUNTAIN CAN BE PROVIDED BY EITHER OF THE FOLLOWING MEANS:
   A. THE SURFACE OF THE FLOOR OR GROUND AT THE DRINKING FOUNTAIN CAN BE OF CONTRASTING COLOR WITH A TEXTURE THAT CONTRASTS IN RESILIENCY WITH THE ADJACENT FINISHED FLOOR MATERIAL, SO THAT IT CAN BE SENSED BY A CANE, WITH THE FRONT EDGE OF THE DRINKING FOUNTAIN AND ONE FOOT BEYOND EACH SIDE OF THE FOUNTAIN, OR
   B. INSTALL WING WALLS ON EACH SIDE OF THE DRINKING FOUNTAIN TO PROJECT OUT FROM THE MAIN WALL AT LEAST AS FAR AS THE DRINKING FOUNTAIN AND TO WITHIN 6" OF THE PATH OF TRAVEL FLOOR FINISH. THERE MUST BE 32" CLEAR BETWEEN THE WING WALLS, OR

NOTE:
ILLUSTRATIONS SHOWN HERE ARE FOR DIMENSIONAL ACCESSIBILITY PURPOSES ONLY. A SECOND DRINKING FOUNTAIN SHOULD BE PROVIDED AT A MOUNTING HEIGHT SUITABLE TO PERSONS WITH LIMITED PHYSICAL BENDING ABILITY, ADJACENT TO THE ACCESSIBLE FOUNTAIN. MAINTAINING MINIMUM CLEARANCES NOTED AND AS REQUIRED. PROVIDE TEXTURED AREA OF CONTRASTING COLOR TO IDENTIFY WATER FOUNTAIN LOCATION AS NOTED. WHEN FOUNTAIN IS AT AN INTERIOR LOCATION, THE TEXTURED AREA SHALL ALSO BE OF DIFFERENT RESILIENCY THAN THAT OF THE ADJACENT FLOOR SURFACE FINISH. SEE TYPICAL ACCESSIBILITY NOTES SHEET FOR ADDITIONAL REQUIREMENTS.

3 ADA FOUNTAIN CLEARANCE
1/8" = 1'-0"

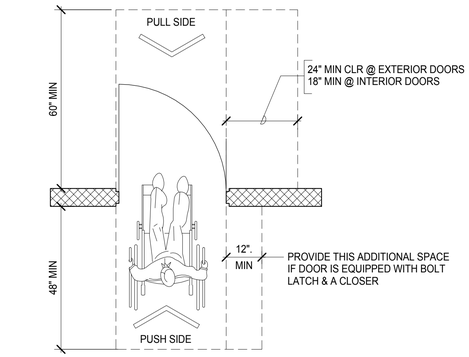

1 ADA DOOR CLEARANCE
1/2" = 1'-0"

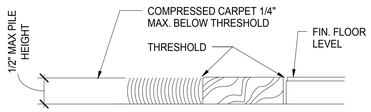

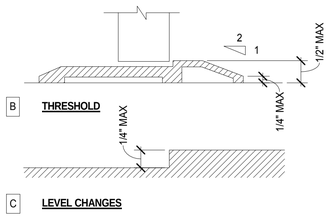

NOTES:

1. 1/2" MAXIMUM TOTAL HEIGHT WITH 1/4" MAXIMUM VERTICAL CHANGE AT EDGE.
2. 1 : 2 SLOPED BEVEL REQUIRED IF LEVEL CHANGE IS OVER 1/4" VERTICAL LEVEL CHANGE.
3. 1/4" MAXIMUM VERTICAL LEVEL CHANGE.

2 ADA THRESHOLD / LEVELING
1/8" = 1'-0"

KITCHELL
Capital Expenditure Managers
2750 Gateway Oaks Drive
Suite 300
Sacramento, CA. 95833
(916) 648-9700

BCAG BUTTE COUNTY ASSOCIATION OF GOVERNMENTS

BUTTE REGIONAL TRANSIT OPERATIONS CENTER
326 HUSS LANE, CHICO CA

BUTTE COUNTY ASSOCIATION OF GOVERNMENTS

PROJECT STATUS:
BID SET
BUILDINGS:

SHEET TITLE:
DETAIL SCHEDULE

SCALE: 0 1/2 1
BAR IS ONE INCH ON ORIGINAL DRAWING. IF NOT ONE INCH ON THIS SHEET, ADJUST SCALES ACCORDINGLY

REVISIONS

No.	Description	Date

JOB NO. 5006A3
DATE 12/3/15
SHEET A003

LAST REVISION: 11/30/2015 1:59:03 PM

C:\BIM\BCAG TI_hornberger.rvt

NOTE:

SITE SHOWN AS EXISTING IS BEING COMPLETED WITHIN A PROJECT ON CAMPUS AHEAD OF THIS PROJECT.

LEGEND:

• • • • • • ACCESSIBLE PATH OF TRAVEL

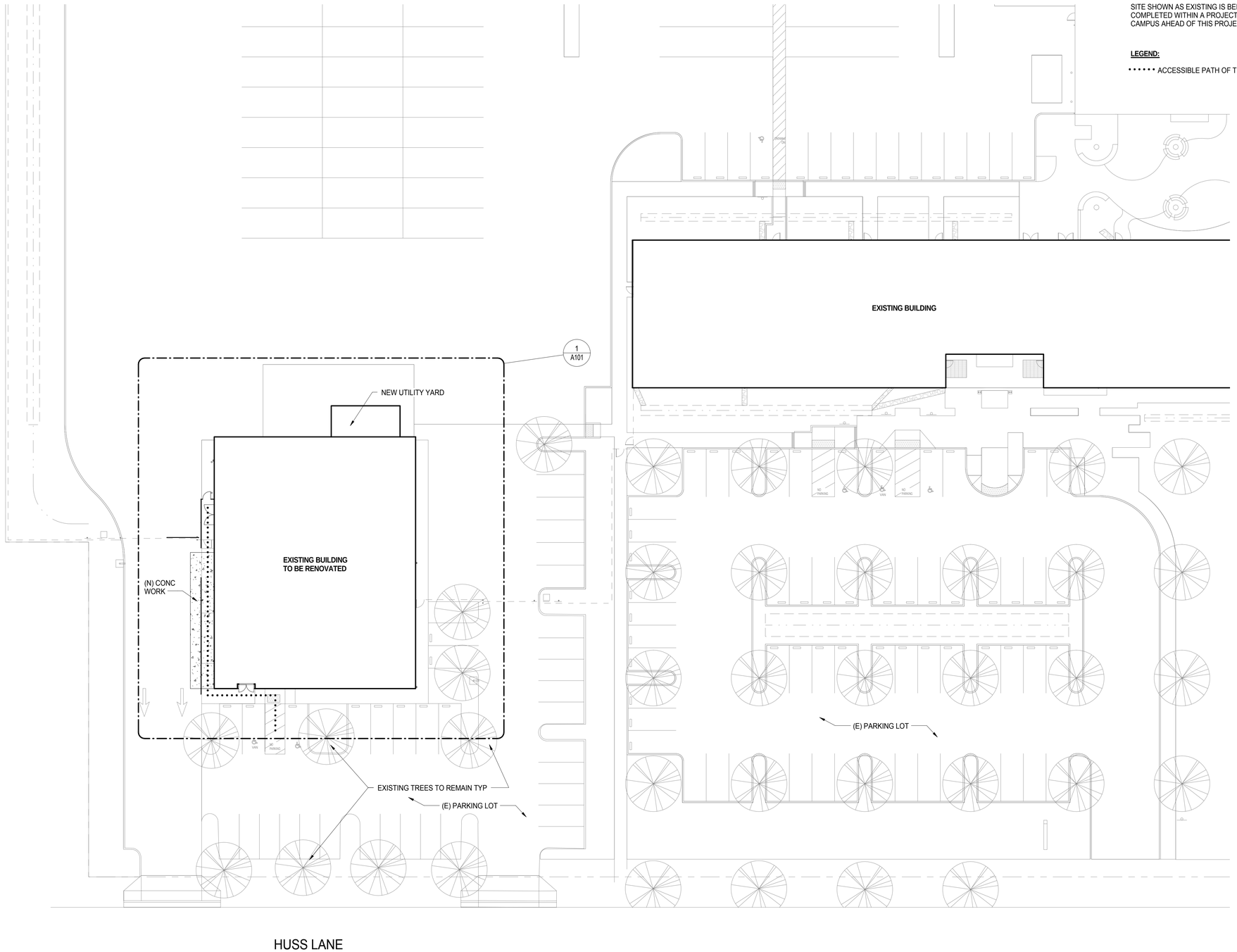

1 SITE PLAN
1" = 20'-0"

KITCHELL
Capital Expenditure Managers
2750 Gateway Oaks Drive
Suite 300
Sacramento, CA. 95833
(916) 648-9700

BCAG BUTTE COUNTY ASSOCIATION OF GOVERNMENTS

BUTTE REGIONAL TRANSIT OPERATIONS CENTER
326 HUSS LANE, CHICO CA

BUTTE COUNTY ASSOCIATION OF GOVERNMENTS

PROJECT STATUS:

BID SET

BUILDINGS:

SHEET TITLE:

ARCHITECTURAL SITE PLAN

SCALE: 0 1/2 1 BAR IS ONE INCH ON ORIGINAL DRAWING. IF NOT ONE INCH ON THIS SHEET, ADJUST SCALES ACCORDINGLY

REVISIONS

No.	Description	Date

JOB NO. 5006A3

DATE 12/3/15

SHEET A100

LAST REVISION: 11/30/2015 1:59:05 PM

C:\BIM\BCAG TI_homberger.rvt

KEYNOTES

1. PEDESTRIAN CONCRETE PAVING: PER CITY OF CHICO REQUIREMENTS. MATCH EXISTING CONCRETE PAVING THICKNESS ADJACENT TO BUILDING (MIN. 4" PCC ON 2" SAND) AND REINFORCING (MIN. #4 @ 16" OC EW). SUBGRADE: SCARIFY AND RECOMPACT 6" OF NATIVE SOIL TO 95% RELATIVE COMPACTION.
2. ASPHALT CONCRETE: PER CITY OF CHICO REQUIREMENTS. MATCH EXISTING STRUCTURAL SECTION THICKNESS. SUBGRADE: SCARIFY AND RECOMPACT 6" OF NATIVE SOIL TO 95% RELATIVE COMPACTION.
3. INSTALL NEW ORNAMENTAL FENCING PER DETAILS THIS SHEET.
4. INSTALL NEW VEGETATION TRELLIS ("GREENSCREEN") PER DETAILS THIS SHEET.
5. CONNECT (N) TO (E) CONCRETE PER DETAIL 5 THIS SHEET.
6. UTILITY PAD CONCRETE: SEE STRUCTURAL FOR DETAILS. EXTEND PAST CMU WALL AS SHOWN.
7. PROVIDE SAWCUT JOINTS AT 5'-0" MIN. SPACING PER DETAIL 6 THIS SHEET.

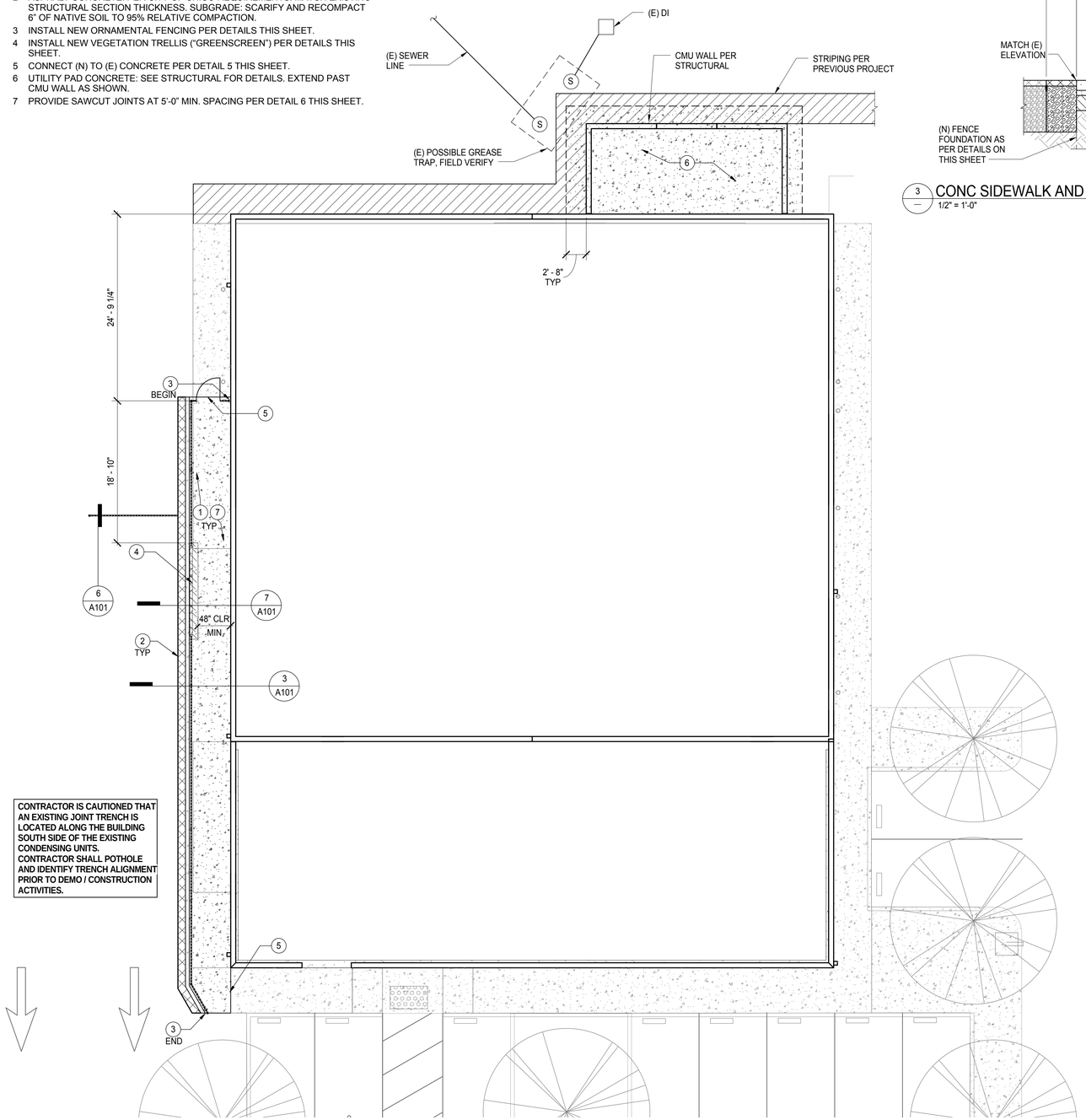

1 ENLARGED SITE PLAN
1/8" = 1'-0"

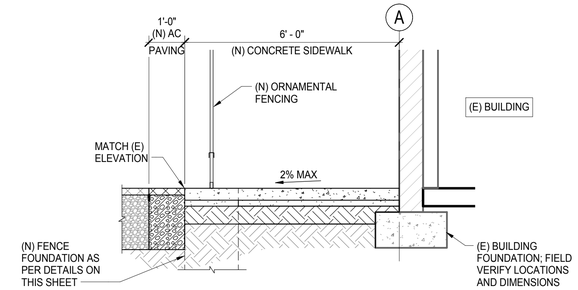

3 CONC SIDEWALK AND PAVING SECTION
1/2" = 1'-0"

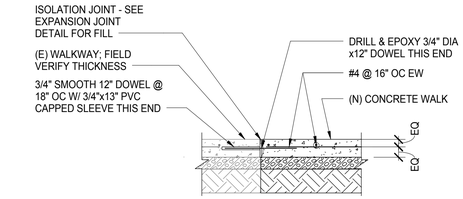

2 (N) TO (E) CONC DOWEL CONNECTION
1/2" = 1'-0"

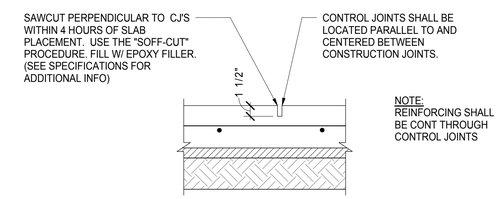

4 SAWCUT JOINT
12" = 1'-0"

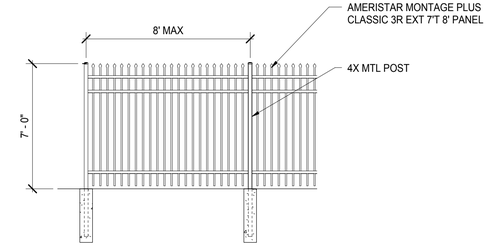

6 ORNAMENTAL FENCE DETAIL
1/4" = 1'-0"

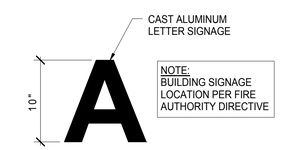

5 BUILDING ID SIGN
1/16" = 1'-0"

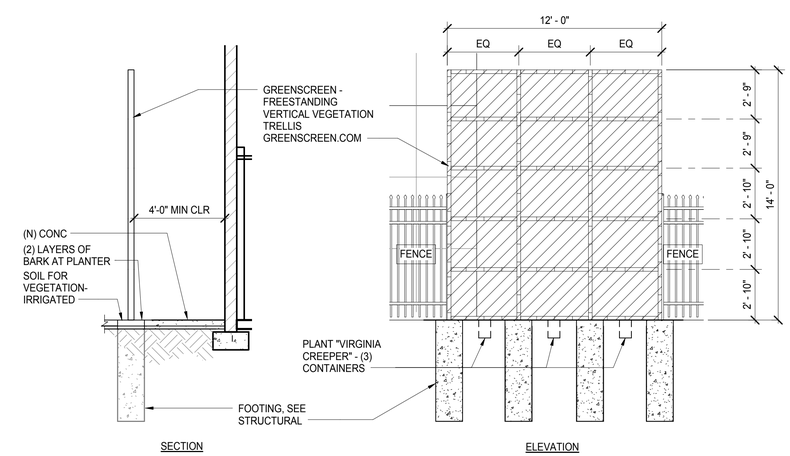

7 VEGETATION TRELLIS DETAIL
1/4" = 1'-0"

LAST REVISION: 11/30/2015 1:59:08 PM

KITCHELL
Capital Expenditure Managers
2750 Gateway Oaks Drive
Suite 300
Sacramento, CA. 95833
(916) 648-9700

BCAG BUTTE COUNTY ASSOCIATION OF GOVERNMENTS

BUTTE REGIONAL TRANSIT OPERATIONS CENTER
326 HUSS LANE, CHICO CA

BUTTE COUNTY ASSOCIATION OF GOVERNMENTS

PROJECT STATUS:
BID SET
BUILDINGS:

SHEET TITLE:
ENLARGED SITE PLAN

SCALE: 0 1/2 1 BAR IS ONE INCH ON ORIGINAL DRAWING. IF NOT ONE INCH ON THIS SHEET, ADJUST SCALES ACCORDINGLY

REVISIONS

No.	Description	Date

JOB NO. 5006A3
DATE 12/3/15
SHEET A101

C:\BIM\BCAG TI_homberger.rvt

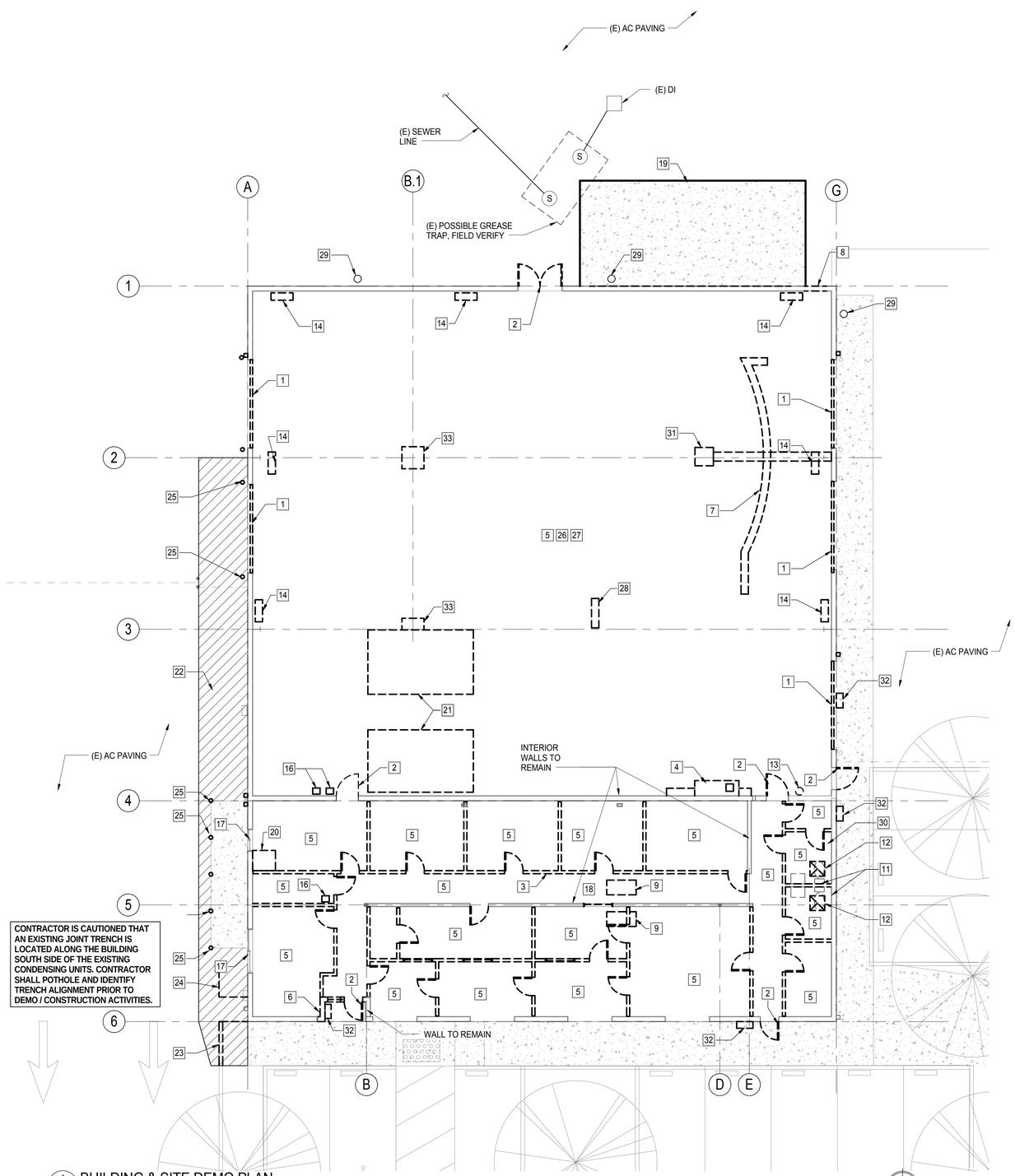

CONTRACTOR IS CAUTIONED THAT AN EXISTING JOINT TRENCH IS LOCATED ALONG THE BUILDING SOUTH SIDE OF THE EXISTING CONDENSING UNITS. CONTRACTOR SHALL POTHOLE AND IDENTIFY TRENCH ALIGNMENT PRIOR TO DEMO / CONSTRUCTION ACTIVITIES.

1 BUILDING & SITE DEMO PLAN
1/8" = 1'-0"

LEGEND:

- EXISTING WALL TO BE REMOVED
- EXISTING WALL TO REMAIN
- EXISTING DOOR TO BE REMOVED
- EXISTING CURBS / PAVING TO BE REMOVED
- EXISTING BOLLARD TO BE REMOVED
- EXISTING BOLLARD TO REMAIN
- PAVEMENT SAWCUT LINE

GENERAL NOTES:

1. CONTRACTOR TO CHECK AND FIELD VERIFY ALL DIMENSION AND CONDITIONS AT JOB SITE INCLUDING LOCATIONS AND DEPTHS OF (E) UTILITIES AND NOTIFY ARCHITECT OF ANY DISCREPANCIES BETWEEN DRAWINGS AND FIELD CONDITIONS BEFORE COMMENCING ANY WORK.
2. CONTRACTOR TO NOTIFY ARCHITECT AND OWNER OF ANY DRY ROT THAT MAY BE DISCOVERED DURING DEMO.
3. CONTRACTOR TO REPAIR IN-KIND ANY AREAS DAMAGED DURING REMOVAL AND DEMO OF (E) ROOFING ASSEMBLY.
4. CONTRACTOR SHALL COORDINATE ALL UTILITY DISCONNECTS/INTERRUPTIONS WITH OWNER MINIMUM 2 WEEKS PRIOR TO START OF WORK.
5. 20 CY DEBRIS BOX FOR OWNER TRASH TO BE RENTED BY CONTRACTOR FOLLOWING MOVE OUT. INCLUDE IN BASE BID AMOUNT.
6. GENERAL CONTRACTOR TO DEMO ALL EQUIPMENT NOT REMOVED BY OWNER.
7. GENERAL CONTRACTOR TO CLEAN ALL WALLS AND SLABS AS REQUIRED TO OBTAIN OPTIMAL CONDITIONS TO RECEIVE NEW FINISHES AND ELIMINATE ODOR.
8. PROVIDE APPROVED REFRIGERENT RECOVERY DOCUMENTATION ACCEPTABLE TO THE AHJ.
9. REMOVE ALL CONDUCTORS FROM ALL DEMOLISHED CONTROL, SIGNAL & POWER CIRCUITS TO THE SERVICE TERMINATION POINT.

 # KEYNOTES

1 (E) ROLL UP DOOR TO BE REMOVED IN ITS ENTIRETY AND TURNED OVER TO THE COUNTY.
2 (E) DOOR TO BE REMOVED.
3 (E) INTERIOR WALLS TO BE REMOVED IN THEIR ENTIRETY UNLESS NOTED.
4 (E) WASH STATION TO BE REMOVED.
5 ALL CEILING & ASSOCIATED LIGHTS, DIFFUSERS, ETC TO BE REMOVED.
6 (E) WALL TO BE REMOVED.
7 DEMOLISH (E) SLAB AS SHOWN.
8 DEMOLISH (E) CMU WALL AS REQUIRED FOR (N) DOOR.
9 DEMOLISH (E) FURNACE UNIT, DUCTWORK, AND ALL ASSOCIATED REFRIGERANT PIPING, GAS PIPING, AND CONTROLS.
10 DEMOLISH (E) CONDENSING UNIT AND ALL ASSOCIATED REFREGERANT PIPING AND CONTROLS. REMOVE CAP W/ PROPER FITTINGS INTENDED FOR PIPE, CONDUIT OR DUCT TERMINATION AND ABANDONMENT.
11 DEMOLISH (E) PLUMBING FIXTURES. REMOVE ALL ASSOCIATED PIPING. REMOVE CAP W/ PROPER FITTINGS INTENDED FOR PIPE, CONDUIT OR DUCT TERMINATION AND ABANDONMENT.
12 DEMOLISH (E) CEILING EXHAUST JAMS. REMOVE ALL ASSOCIATED DUCTWORK AND CONTROLS. REMOVE CAP W/ PROPER FITTINGS INTENDED FOR PIPE, CONDUIT OR DUCT TERMINATION AND ABANDONMENT.
13 DEMOLISH (E) ELECTRIC WATER HEATER. REMOVE ALL ASSOCIATED PIPING AND CONTROLS. REMOVE CAP W/ PROPER FITTINGS INTENDED FOR PIPE, CONDUIT OR DUCT TERMINATION AND ABANDONMENT.
14 DEMOLISH (E) GAS UNIT HEATERS (TYP. OF 6) AND REMOVE ALL ASSOCIATED GAS PIPING AND CONTROLS. REMOVE CAP W/ PROPER FITTINGS INTENDED FOR PIPE, CONDUIT OR DUCT TERMINATION AND ABANDONMENT.
15 (E) MAIN SERVICE SWITCHBOARD TO BE DEMOLISHED.
16 (E) PANELS TO BE DEMOLISHED.
17 (E) WINDOW / STOREFRONT TO BE REMOVED. PATCH / REPAIR OPENING TO RECEIVE (N) WINDOW.
18 (E) PLATFORM ABOVE CEILING TO REMAIN.
19 DEMOLISH (E) ASPHALT & CONCRETE AS REQUIRED FOR UTILITY YARD.
20 DEMO SLAB AS REQUIRED FOR JANITOR SINK AND PLUMBING LINES.
21 DEMO SLAB AS REQUIRED FOR RESTROOMS AND PLUMBING LINES.
22 SAWCUT, DEMO & REMOVE (E) PAVING WITHIN LIMITS AS SHOWN.
23 SAWCUT, DEMO AND REMOVE (E) CURB WITHIN LIMITS AS SHOWN.
24 REMOVE (E) CHAIN LINK FENCE AND GATE; REMOVE FOUNDATION TO 12 INCHES BELOW GRADE.
25 REMOVE (E) BOLLARDS AND FOUNDATION TO 12 INCHES BELOW GRADE ALONG SOUTH SIDE OF BUILDING.
26 DEMO ALL (E) UNISTRUT ALONG INSIDE OF CMU.
27 ALL (E) ROOF INSULATION TO BE REMOVED AND REPLACED.
28 DEMO SLAB AS REQUIRED FOR RAMP. SEE STRUCTURAL DRAWINGS.
29 COORDINATE THE REMOVAL OF (E) ANTENNA W/ OWNER.
30 DEMO SLAB AS REQUIRED FOR LINES TO KITCHEN SINK.
31 DEMO SLAB AS REQUIRED FOR FLOOR BOX AND CONDUIT PATH.
32 (E) EXTERIOR LIGHTS TO BE DEMOLISHED.
33 DEMO SLAB AS REQUIRED FOR COLUMN FOOTING. SEE STRUCTURAL DAWINGS.

KITCHELL
Capital Expenditure Managers
2750 Gateway Oaks Drive
Suite 300
Sacramento, CA. 95833
(916) 648-9700

BCAG BUTTE COUNTY ASSOCIATION OF GOVERNMENTS

BUTTE REGIONAL TRANSIT OPERATIONS CENTER
326 HUSS LANE, CHICO CA

BUTTE COUNTY ASSOCIATION OF GOVERNMENTS

PROJECT STATUS:
BID SET

BUILDINGS:

SHEET TITLE:
DEMO FLOOR PLAN

SCALE: 0 1/2 1 BAR IS ONE INCH ON ORIGINAL DRAWING. IF NOT ONE INCH ON THIS SHEET, ADJUST SCALES ACCORDINGLY

REVISIONS

No.	Description	Date

JOB NO. 5006A3
DATE 12/3/15
SHEET AD201

C:\BIM\BCAG TI_hornberger.rvt

LAST REVISION: 11/30/2015 1:59:42 PM

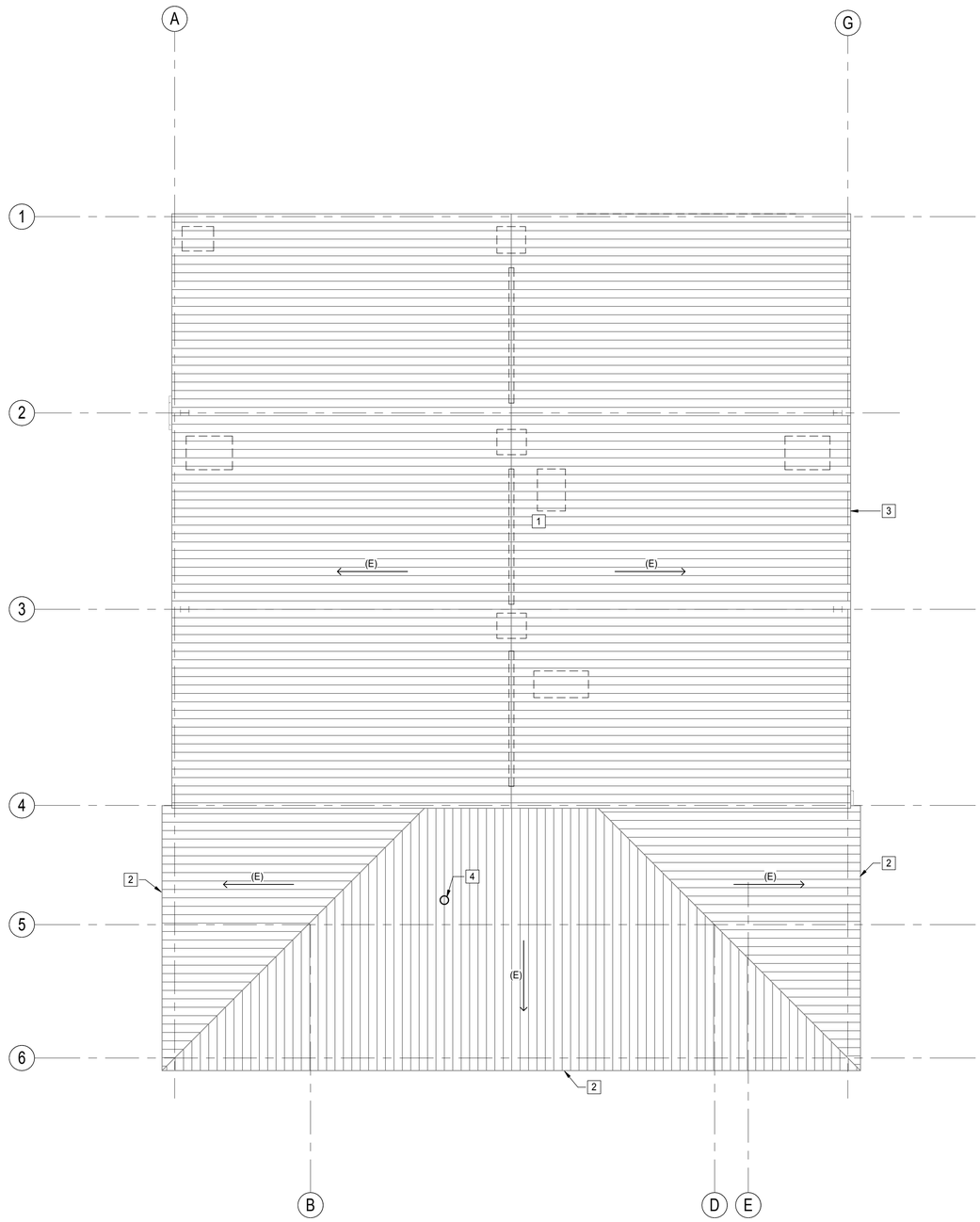

1 DEMO ROOF PLAN
1/8" = 1'-0"

GENERAL NOTES:

1. ALL ITEMS SHOWN ON PLAN TO BE REMOVED ARE DIAGRAMMATIC & LOCATIONS ARE APPROXIMATE.
2. GC TO FIELD VERIFY QUANTITY OF ITEMS TO BE REMOVED FROM ROOM AND TO COORDINATE WITH OWNER WHAT IS TO BE SALVAGED FOR FUTURE USE.

 # KEYNOTES

1 DEMOLISH ALL HVAC & EXHAUST EQUIPMENT FROM ROOF IN THEIR ENTIRETY. ALL ITEMS REMOVED THAT LEAVE AN OPENING IN THE ROOF TO BE FILLED TO MATCH (E) ROOF SECTION. METAL ROOF PANEL ON TOP TO BE REPLACED W/ A (N) PANEL TO MATCH.
2 GUTTERS & DOWNSPOUTS TO REMAIN.
3 (E) GUTTERS & DOWNSPOUTS TO BE REMOVED.
4 REMOVE (E) VENTILATION PIPE & CAP. REUSE PENETRATION FOR (N) RELIEF VENT HOOD.

KITCHELL
Capital Expenditure Managers
2750 Gateway Oaks Drive
Suite 300
Sacramento, CA. 95833
(916) 648-9700

BCAG BUTTE COUNTY ASSOCIATION OF GOVERNMENTS

BUTTE REGIONAL TRANSIT OPERATIONS CENTER
326 HUSS LANE, CHICO CA

BUTTE COUNTY ASSOCIATION OF GOVERNMENTS

PROJECT STATUS:
BID SET
BUILDINGS:

SHEET TITLE:
DEMO ROOF PLAN

SCALE: 0 1/2 1 BAR IS ONE INCH ON ORIGINAL DRAWING. IF NOT ONE INCH ON THIS SHEET, ADJUST SCALES ACCORDINGLY

REVISIONS

No.	Description	Date

JOB NO. 5006A3
DATE 12/3/15
SHEET AD230

LAST REVISION: 11/30/2015 1:59:43 PM

C:\BIM\BCAG TI_hornberger.rvt

GENERAL NOTES:

1. SEE A221 FOR WALLS THAT EXTEND TO ROOF DECK.
2. ALL INTERIOR DOORS SET A MINIMUM OF 3" FROM ADJACENT WALLS.

(#) KEYNOTES

1 (E) LOAD BEARING WALL TO REMAIN. GENERAL CONTRACTOR TO PROTECT DURING CONSTRUCTION AND TO REPAIR AS NECESSARY BASED ON SCOPE OF (N) CONSTRUCTION. INSTALL (N) FINISH MATERIALS (GYPSUM BOARD, WALL BASE, PAINT, STC.) AS REQUIRED TO MATCH (N) DESIGN.

2 (N) DOWNSPOUTS & GUTTERS. REMOVE (E) DOWNSPOUT & GUTTERS AND REPLACE. GENERAL CONTRACTOR TO COORDINATE WITH ARCHITECT ON POSITION OF DOWNSPOUTS.

3 SEE STRUCTURAL DRAWINGS FOR WALL CONSTRUCTION. FINISHES PER INTERIOR ELEVATIONS.

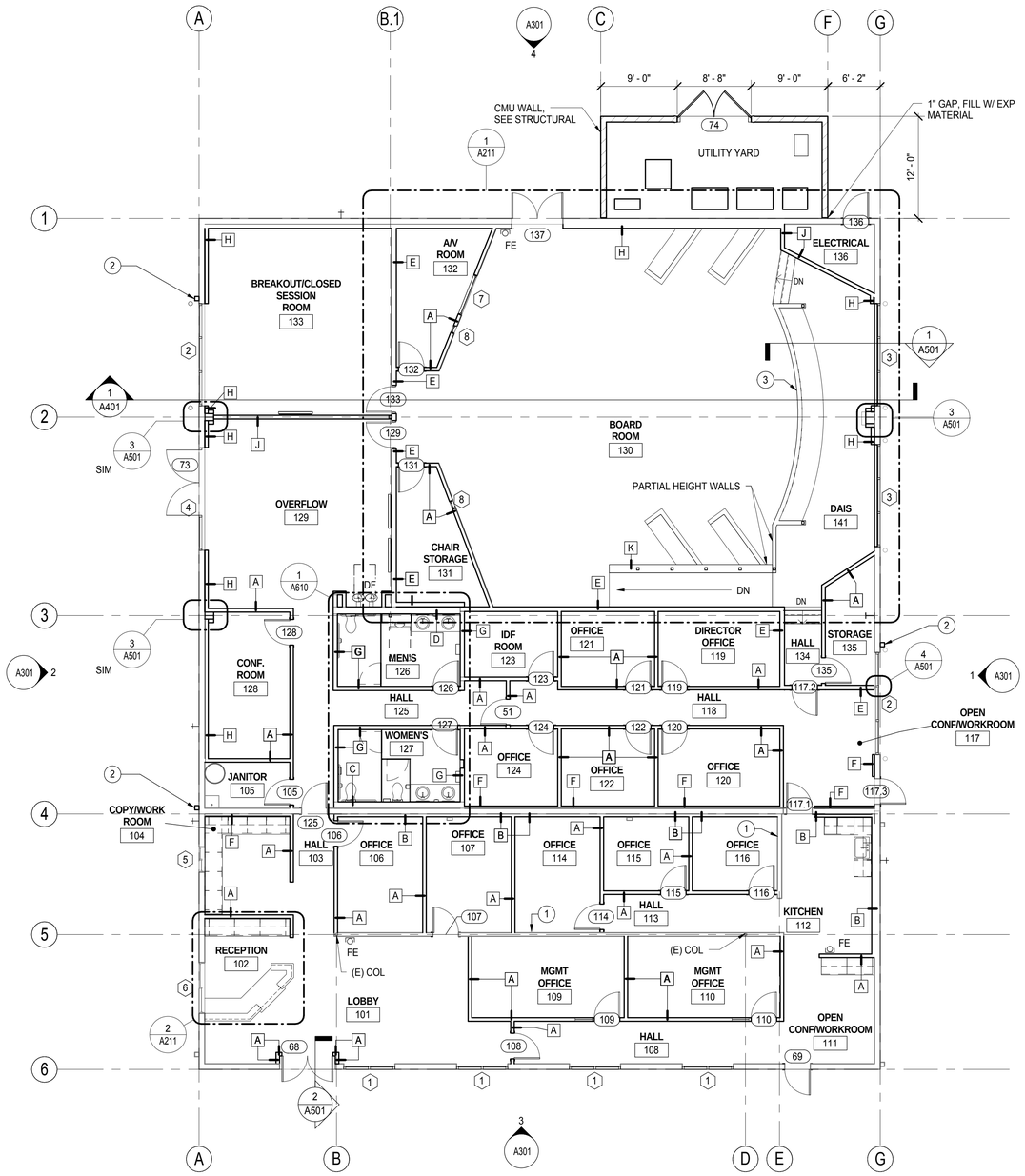

1 FLOOR PLAN
1/8" = 1'-0"

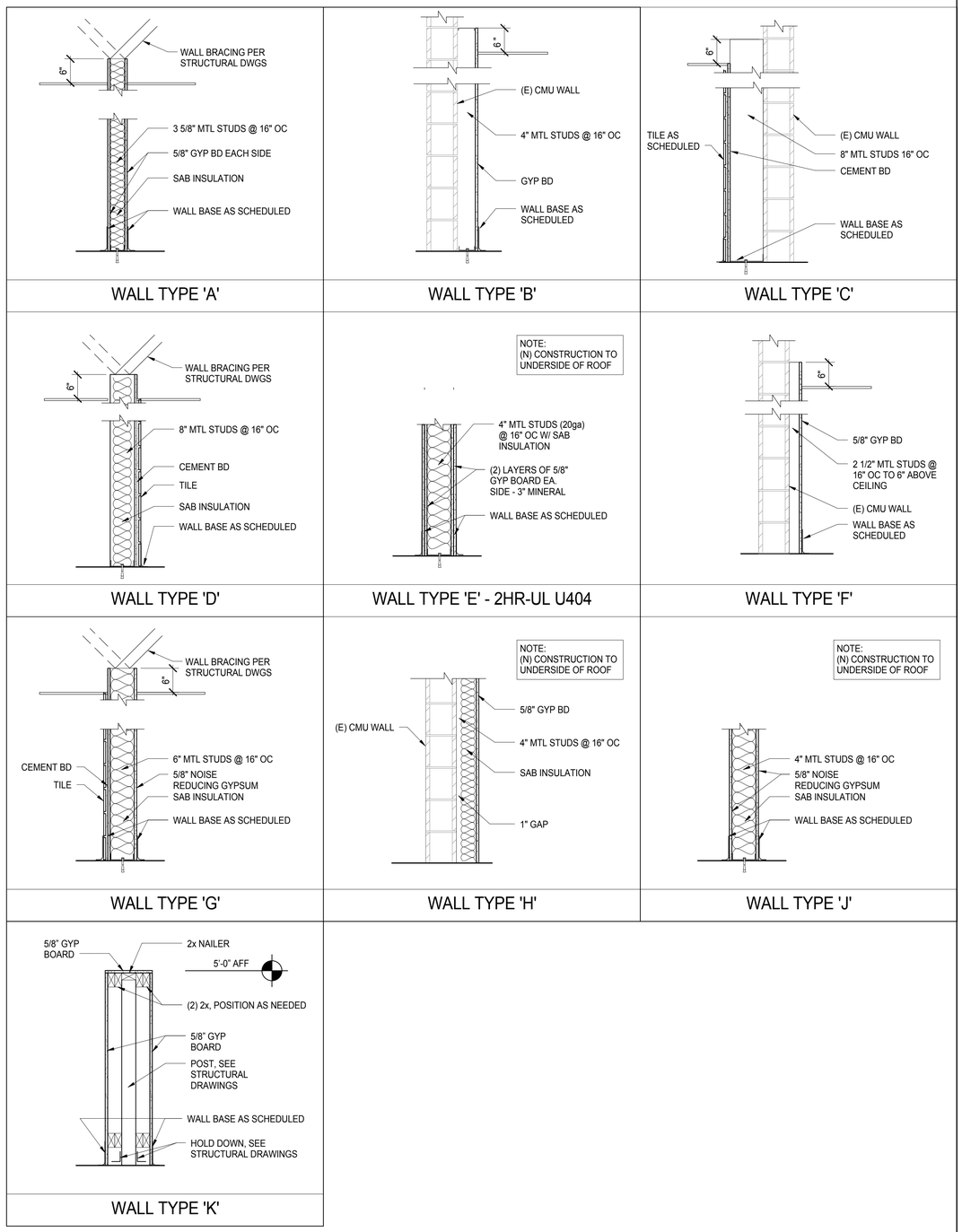

2 ARCHITECTURAL WALL TYPES
3/4" = 1'-0"

KITCHELL
Capital Expenditure Managers
2750 Gateway Oaks Drive
Suite 300
Sacramento, CA. 95833
(916) 648-9700

BCAG BUTTE COUNTY ASSOCIATION OF GOVERNMENTS

BUTTE REGIONAL TRANSIT OPERATIONS CENTER
326 HUSS LANE, CHICO CA

BUTTE COUNTY ASSOCIATION OF GOVERNMENTS

PROJECT STATUS:
BID SET

BUILDINGS:

SHEET TITLE:
FLOOR PLAN

SCALE: 0 1/2 1 BAR IS ONE INCH ON ORIGINAL DRAWING. IF NOT ONE INCH ON THIS SHEET, ADJUST SCALES ACCORDINGLY

REVISIONS

No.	Description	Date

JOB NO. 5006A3
DATE 12/3/15
SHEET A201

LAST REVISION: 11/30/2015 1:59:10 PM

C:\BIM\BCAG TI_hornberger.rvt

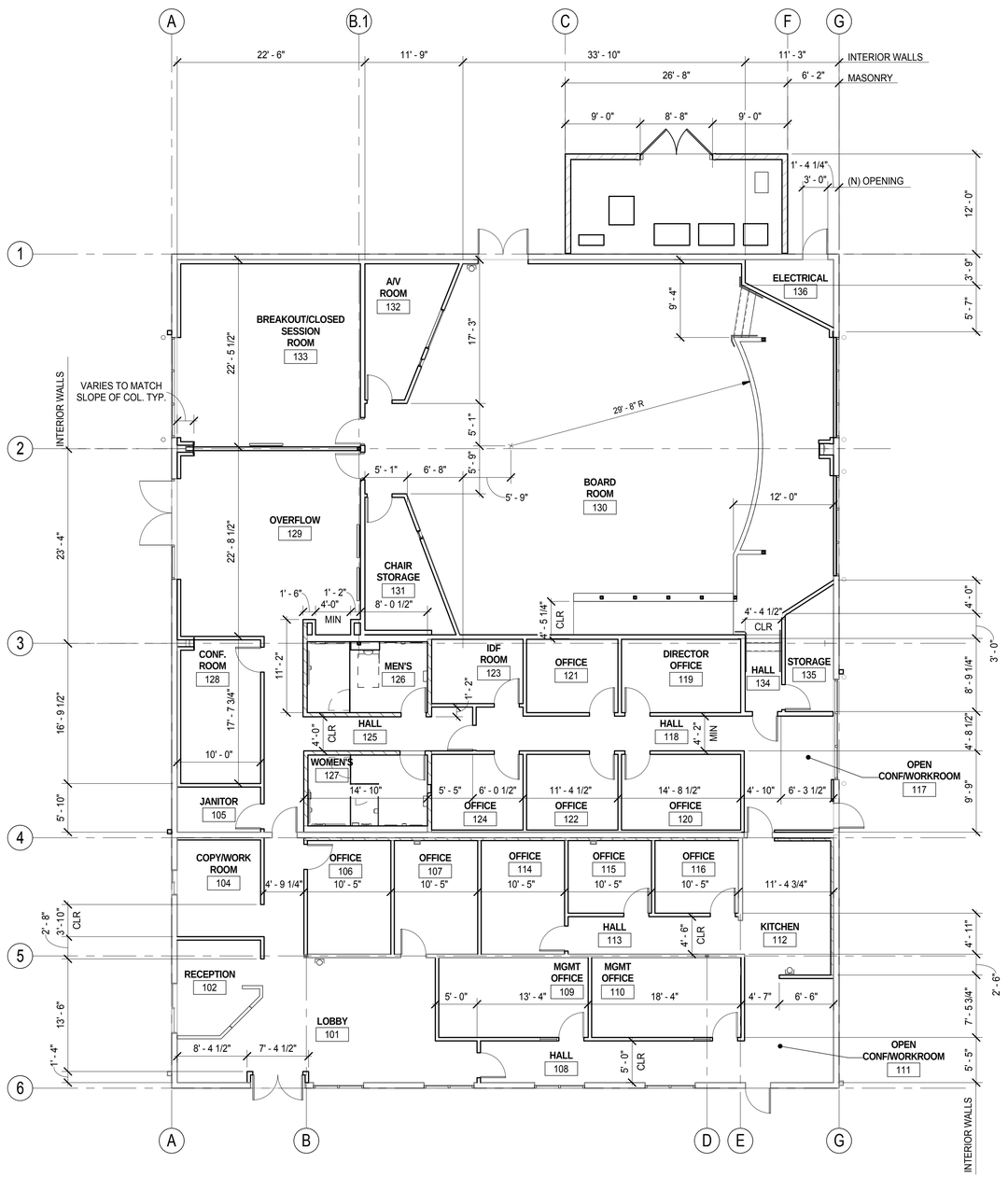

1 FLOOR PLAN - DIMENSIONS
1/8" = 1'-0"

LAST REVISION: 11/30/2015 1:59:11 PM

KITCHELL
Capital Expenditure Managers
2750 Gateway Oaks Drive
Suite 300
Sacramento, CA. 95833
(916) 648-9700

BCAG BUTTE COUNTY ASSOCIATION OF GOVERNMENTS

BUTTE REGIONAL TRANSIT OPERATIONS CENTER
326 HUSS LANE, CHICO CA

BUTTE COUNTY ASSOCIATION OF GOVERNMENTS

PROJECT STATUS:
BID SET

BUILDINGS:

SHEET TITLE:
FLOOR PLAN - DIMENSIONS

SCALE: 0 1/2 1
BAR IS ONE INCH ON ORIGINAL DRAWING. IF NOT ONE INCH ON THIS SHEET, ADJUST SCALES ACCORDINGLY

REVISIONS

No.	Description	Date

JOB NO. 5006A3
DATE 12/3/15
SHEET A202

C:\BIM\BCAG TI_homberger.rvt

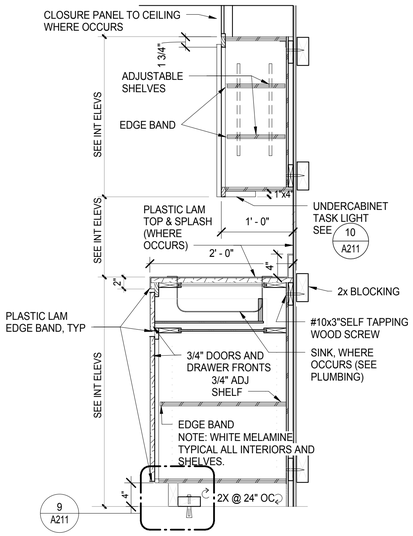

8 FULL HEIGHT CABINET SECTION
1" = 1'-0"

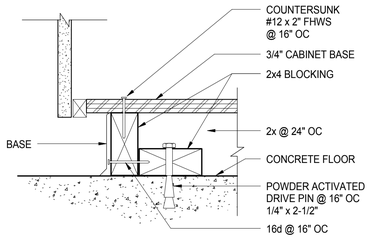

9 BASE CABINET FLOOR ANCHOR
3" = 1'-0"

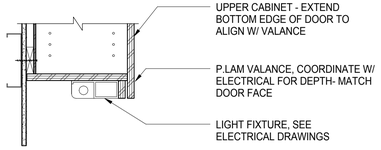

10 UNDER CABINET LIGHTING
1 1/2" = 1'-0"

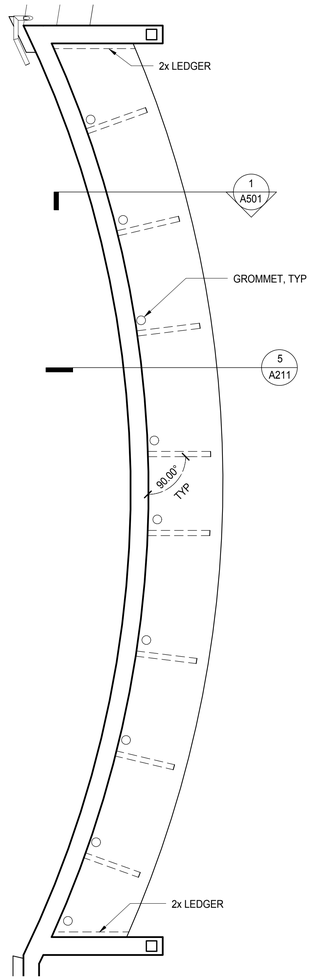

6 ENLARGED DAIS CASEWORK PLAN
1/2" = 1'-0"

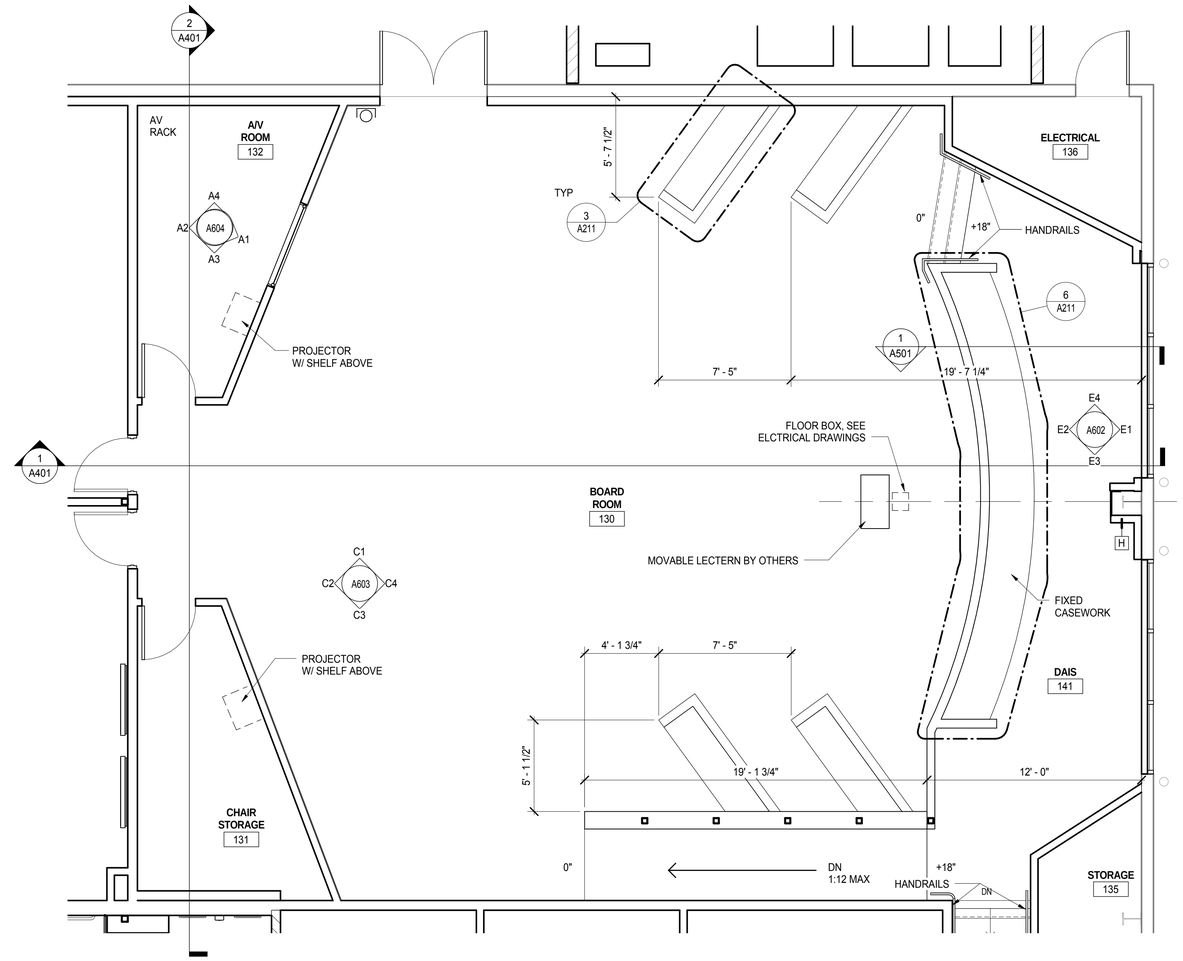

1 ENLARGED COUNCIL CHAMBERS PLAN
1/4" = 1'-0"

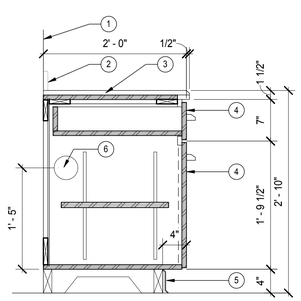

1. WALL AS SCHEDULED.
2. 4" SOLID SURFACE BACKSPLASH.
3. SOLID SURFACE COUNTER ON PLYWOOD.
4. LOCKABLE DOOR W/ DOOR SCREEN.
5. RUBBER BASE.
6. VENTILATION GRILLE - LOCATE ON CABINET SIDE PANEL WHERE KNEE-SPACE OCCURS.

11 TYPICAL BASE CABINET
1" = 1'-0"

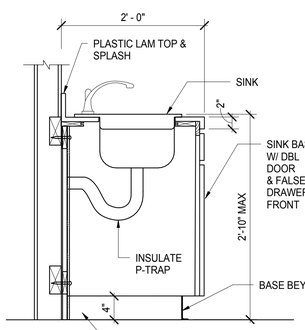

7 ADA CASEWORK AT SINK
1" = 1'-0"

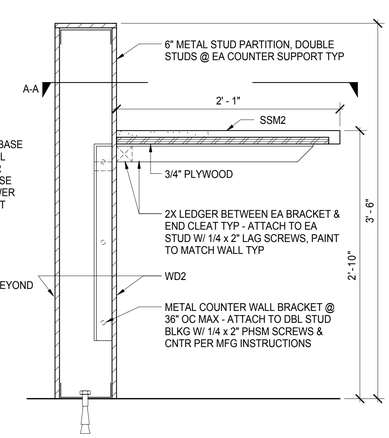

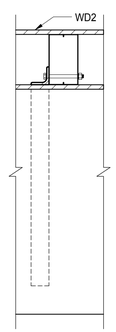

5 BOARD ROOM CASEWORK (DAIS SIM)
1 1/2" = 1'-0"

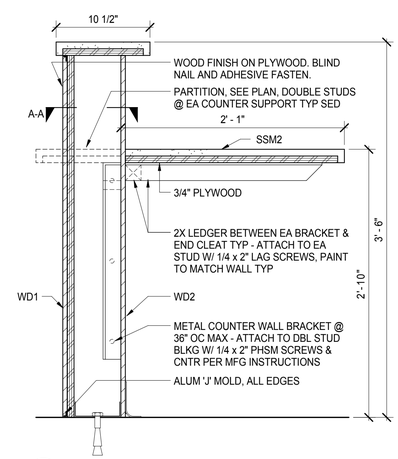

4 RECEPTION DESK
1 1/2" = 1'-0"

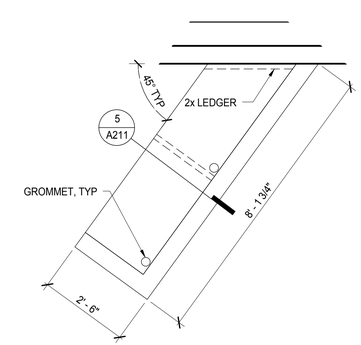

3 BOARD RM CASEWORK PLAN
1/2" = 1'-0"

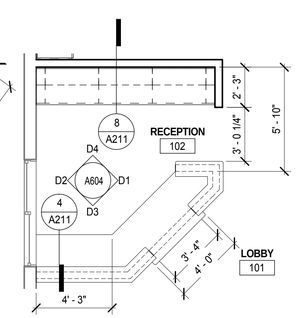

2 RECEPTION PLAN
1/4" = 1'-0"

LAST REVISION: 11/30/2015 1:59:13 PM

KITCHELL
Capital Expenditure Managers
2750 Gateway Oaks Drive
Suite 300
Sacramento, CA. 95833
(916) 648-9700

BCAG BUTTE COUNTY ASSOCIATION OF GOVERNMENTS

BUTTE REGIONAL TRANSIT OPERATIONS CENTER
326 HUSS LANE, CHICO CA

BUTTE COUNTY ASSOCIATION OF GOVERNMENTS

PROJECT STATUS:
BID SET

BUILDINGS:

SHEET TITLE:
ENLARGED FLOOR PLANS

SCALE: 0 1/2 1 BAR IS ONE INCH ON ORIGINAL DRAWING. IF NOT ONE INCH ON THIS SHEET, ADJUST SCALES ACCORDINGLY

REVISIONS

No.	Description	Date

JOB NO. 5006A3
DATE 12/3/15
SHEET A211

C:\BIM\BCAG TI_hornberger.rvt

 # KEYNOTES

1. CEILING AT OVERFLOW, SEE STRUCTURAL DRAWINGS.
2. LOCATE 30"x30" PANEL ABOVE CEILING TO ACCESS MECHANICAL ATTIC AREA.
3. CEILING HEIGHTS IN ROOMS EAST OF GRIDLINE 4 TO BE VERIFIED WITH ARCHITECT. GENERAL CONTRACTOR TO CONFIRM DIMENSION TO UNDERSIDE OF (E) JOISTS AND ALERT ARCHITECT PRIOR TO CONSTRUCTION.

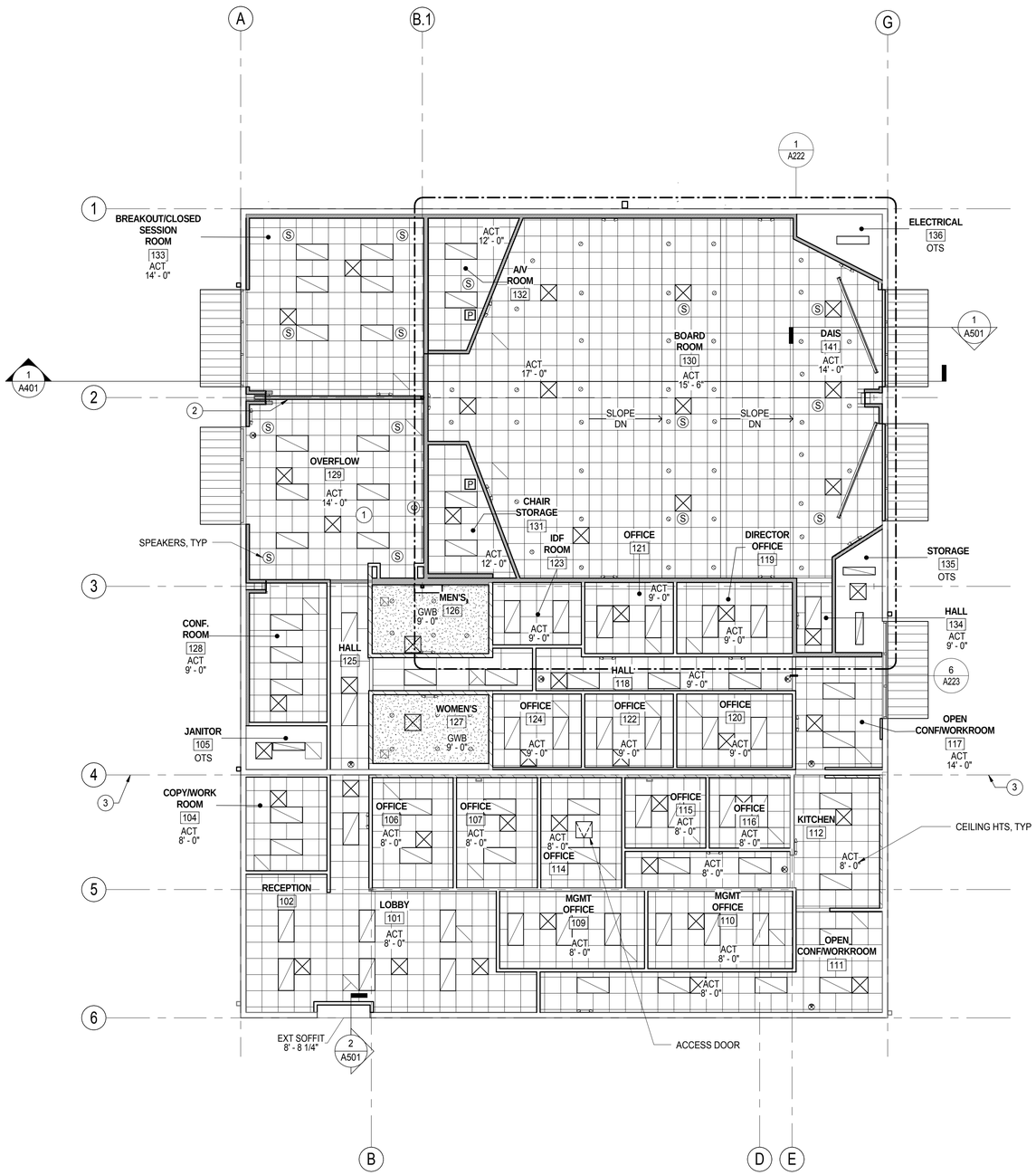

1 REFLECTED CEILING PLAN
1/8" = 1'-0"

RCP LEGEND

DESCRIPTION	SYMBOL
AIR RETURN	
AIR SUPPLY	
EXHAUST FAN	
CEILING MOUNTED CAMERA (BY OTHERS)	
SMOKE DETECTOR	D
CEILING SPEAKER	S
PROJECTOR	P
EXIT SIGN	
DOWN LIGHT	
2X2 ACOUSTICAL T-BAR	
1X4 CHAIN SUSPENDED LIGHT	
2X4 LIGHT	
WALL TO UNDERSIDE OF ROOF	
WALL HT 6" ABV ADJACENT CLG	

KITCHELL
Capital Expenditure Managers
2750 Gateway Oaks Drive
Suite 300
Sacramento, CA. 95833
(916) 648-9700

BCAG BUTTE COUNTY ASSOCIATION OF GOVERNMENTS

BUTTE REGIONAL TRANSIT OPERATIONS CENTER
326 HUSS LANE, CHICO CA

BUTTE COUNTY ASSOCIATION OF GOVERNMENTS

PROJECT STATUS:
BID SET
BUILDINGS:

SHEET TITLE:
REFLECTED CEILING PLAN

SCALE: 0 1/2 1 — BAR IS ONE INCH ON ORIGINAL DRAWING. IF NOT ONE INCH ON THIS SHEET, ADJUST SCALES ACCORDINGLY

REVISIONS

No.	Description	Date

JOB NO. 5006A3
DATE 12/3/15
SHEET A221

C:\BIM\BCAG TI_homberger.rvt

LAST REVISION: 11/30/2015 1:59:16 PM

KEYNOTES

1 MECHANICAL WINDOW SHADE ATTACH TO UNDERSIDE OF OPENING. SEE 8/A223
2 OVERHEAD PROJECTOR SCREEN.SEE DTL 10/A223.
3 MECHANICAL SHADE MOUNT WITHIN CMU OPENING.

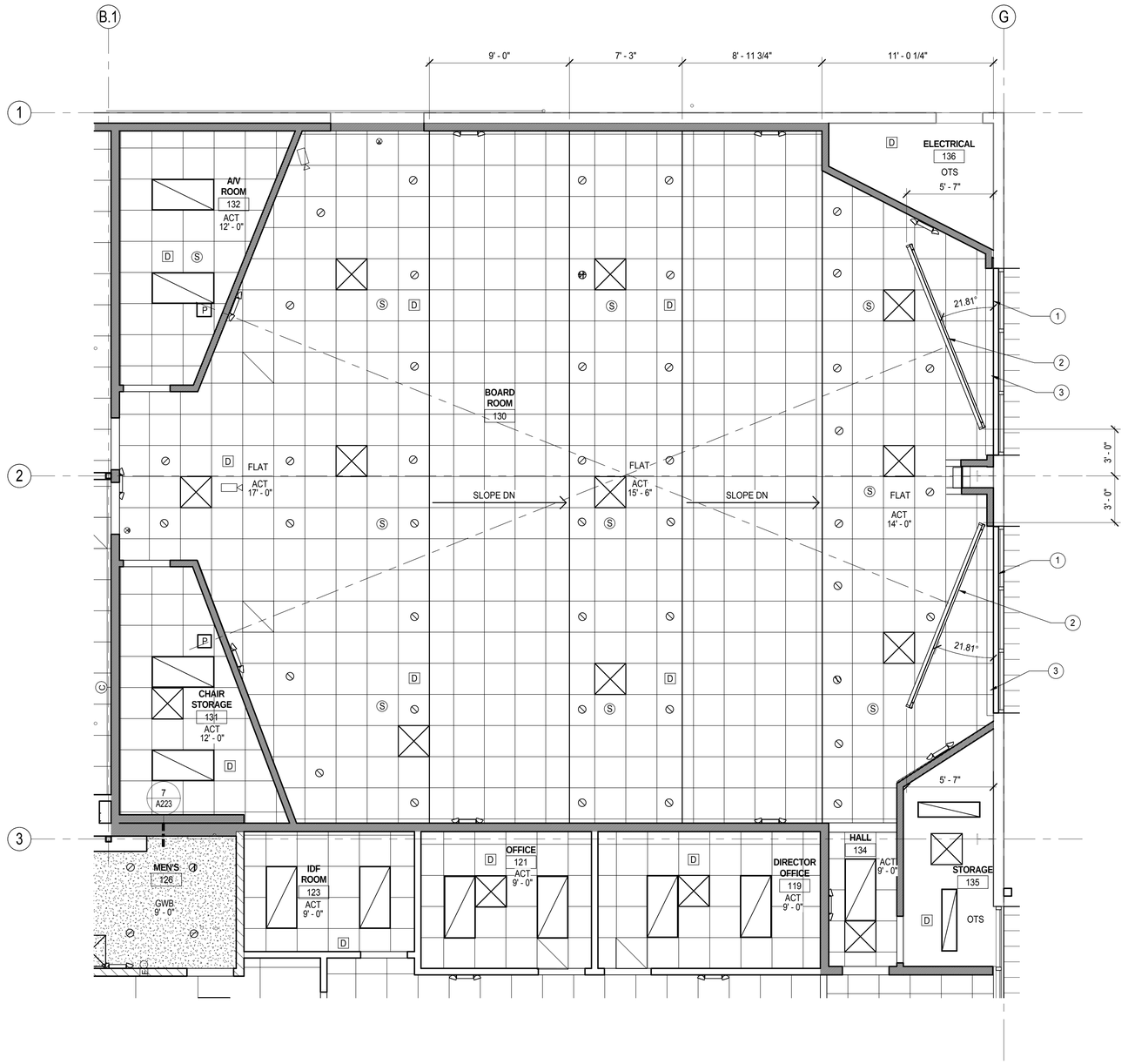

1 ENLARGED CEILING PLAN
1/4" = 1'-0"

RCP LEGEND

DESCRIPTION	SYMBOL
AIR RETURN	
AIR SUPPLY	
EXHAUST FAN	
CEILING MOUNTED CAMERA (BY OTHERS)	
SMOKE DETECTOR	D
CEILING SPEAKER	S
PROJECTOR	P
EXIT SIGN	
DOWN LIGHT	
2X2 ACOUSTICAL T-BAR	
1X4 CHAIN SUSPENDED LIGHT	
2X4 LIGHT	
WALL TO UNDERSIDE OF ROOF	
WALL HT 6" ABV ADJACENT CLG	

KITCHELL
Capital Expenditure Managers
2750 Gateway Oaks Drive
Suite 300
Sacramento, CA. 95833
(916) 648-9700

BCAG BUTTE COUNTY ASSOCIATION OF GOVERNMENTS

BUTTE REGIONAL TRANSIT OPERATIONS CENTER
326 HUSS LANE, CHICO CA

BUTTE COUNTY ASSOCIATION OF GOVERNMENTS

PROJECT STATUS:
BID SET
BUILDINGS:

SHEET TITLE:
ENLARGED CEILING PLAN

SCALE: 0 1/2 1 BAR IS ONE INCH ON ORIGINAL DRAWING. IF NOT ONE INCH ON THIS SHEET, ADJUST SCALES ACCORDINGLY

REVISIONS

No.	Description	Date

JOB NO. 5006A3
DATE 12/3/15
SHEET A222

LAST REVISION: 11/30/2015 1:59:17 PM

C:\BIM\BCAG TI_hornberger.rvt

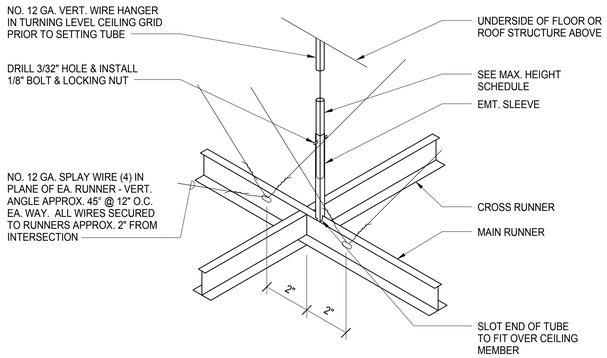

MAX HEIGHT SCHEDULE	
EMT SIZE	CEILING TO STRUCTURE ABOVE
3/4"	5'-1" MAX
1"	6'-6" MAX
1 1/4"	8'-6" MAX
1 1/2"	9'-10" MAX
2 1/2"	16'-6" MAX
3"	20'-2" MAX

11 — SUSPENDED CEILING
3" = 1'-0"

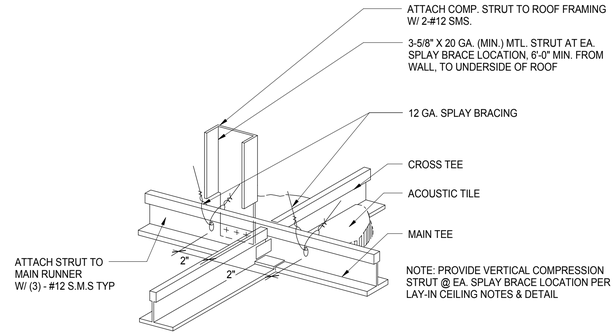

5 — SUSPENDED CEILING COMPRESSION STRUT
NTS

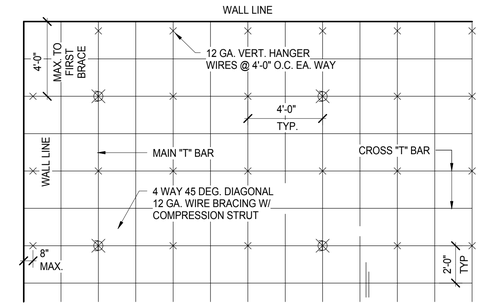

1 — DIAGRAMMATIC CEILING PLAN
NTS

CEILING NOTES:

THE FOLLOWING NOTES WILL BE APPLICABLE IN PLANS AND SPECIFICATION FOR CEILING SYSTEMS WHOSE TOTAL WEIGHT, INCLUDING AIR CONDITIONING/HEATING GRILLES AND LIGHT FIXTURES DOES NOT EXCEED TWO (2) PSF. HEAVIER SYSTEM, AND THOSE SUPPORTING LATERAL LOADS FROM PARTITIONS, WILL REQUIRE SPECIAL DESIGN DETAILS:

1. #12 GAGE (MIN.) HANGER WIRES MAY BE USED FOR UP TO AND INCLUDING 4' BY 4' GRID SPACING AND SHALL BE ATTACHED TO MAIN RUNNERS.
2. PROVIDE #12 GAGE HANGER WIRES AT THE ENDS OF ALL MAIN AND CROSS RUNNERS WITHIN EIGHT (8) INCHES OF THE SUPPORT OR WITHIN ONE-FOURTH (1/4) OF THE LENGTH OF THE END TEE, WHICHEVER IS LEAST, FOR THE PERIMETER OF THE CEILING AREA.
3. PROVIDE TRAPEZE OR OTHER SUPPLEMENTARY SUPPORT MEMBERS AT OBSTRUCTION TO TYPICAL HANGER SPACING. PROVIDE ADDITIONAL HANGERS, STRUTS OR BRACES AS REQUIRED AT ALL CEILING BREAKS, SOFFITS OR DISCONTINUOUS AREAS. HANGER WIRES THAT ARE MORE THAN 1 IN 6 OUT OF PLUMB ARE TO HAVE COUNTER-SLOPING WIRES.
4. CEILING GRID MEMBERS MAY BE ATTACHED TO NOT MORE THAN TWO (2) ADJACENT WALLS. CEILING GRID MEMBERS SHALL BE AT LEAST 1/2 INCH CLEAR OF OTHER WALLS. IF WALLS RUN DIAGONALLY TO CEILING GRID SYSTEM RUNNERS, ONE END OF MAIN AND CROSS RUNNERS SHOULD BE FREE, AND A MINIMUM OF 1/2 INCH CLEAR OF WALL.
5. AT THE PERIMETER OF THE CEILING AREA WHERE MAIN OR CROSS RUNNERS ARE NOT CONNECTED TO THE ADJACENT WALL, PROVIDE INTERCONNECTION BETWEEN THE RUNNERS AT THE FREE END TO PREVENT LATERAL SPREADING. A METAL STRUT OR A #16 GAGE WIRE WITH A POSITIVE MECHANICAL CONNECTION TO THE RUNNER MAY BE USED. WHERE THE PERPENDICULAR DISTANCE FROM THE WALL TO THE FIRST PARALLEL RUNNER IS 12 INCHES OR LESS, THIS INTERLOCK IS NOT REQUIRED.
6. PROVIDE BRACING ASSEMBLIES CONSISTING OF A COMPRESSION STRUT AND FOUR (4) #12 GAGE SPLAYED BRACING WIRES ORIENTED 90 DEGREES. THE SLOPE OF THESE WIRES SHALL NOT EXCEED 45 DEGREES FROM THE PLANE OF THE CEILING AND SHALL BE TAUT.
   - A. PROVIDE BRACING ASSEMBLIES AT LOCATIONS NOT MORE THAN ONE- HALF (1/2) THE SPACINGS GIVEN ABOVE, FROM EACH PERIMETER WALL AND AT THE EDGE OF VERTICAL CEILING OFFSETS.
   - B. SUSPENDED ACOUSTICAL CEILING SYSTEMS WITH A CEILING AREA OF 144 SQUARE FEET OR LESS, SURROUNDED BY WALLS WHICH CONNECT DIRECTLY TO THE STRUCTURE ABOVE, DO NOT REQUIRE BRACING ASSEMBLIES WHEN ATTACHED TO TWO ADJACENT WALLS.
7. FASTEN HANGER WIRES WITH NOT LESS THAN THREE (3) TIGHT TURNS. FASTEN BRACING WIRES WITH FOUR (4) TIGHT TURNS. MAKE ALL TIGHT TURNS WITHIN A DISTANCE OF 1-1/2 INCHES. HANGER OR BRACING WIRE ANCHORS TO THE STRUCTURE SHOULD BE INSTALLED IN SUCH A MANNER THAT THE DIRECTION OF THE ANCHOR ALIGNS AS CLOSELY AS POSSIBLE WITH THE DIRECTION OF THE WIRE.
8. SEPARATE ALL CEILING HANGER AND BRACING WIRES AT LEAST SIX (6) INCHES FROM ALL UNBRACED DUCTS, PIPES, CONDUIT, ETC.
9. ATTACH ALL LIGHT FIXTURES AND CEILING MOUNTED AIR TERMINALS, TO THE CEILING GRID RUNNERS TO RESIST A HORIZONTAL FORCE EQUAL TO THE WEIGHT OF THE FIXTURES. SCREWS OR APPROVED FASTENERS ARE REQUIRED.
10. FLUSH OR RECESSED LIGHT FIXTURES AND AIR TERMINALS, WEIGHING LESS THAN 56 LBS., MAY BE SUPPORTED DIRECTLY ON THE RUNNERS OF A HEAVY DUTY GRID SYSTEM BUT, IN ADDITION, THEY MUST HAVE A MINIMUM OF TWO (2) #12 GAGE SLACK SAFETY WIRES ATTACHED TO THE FIXTURE AT DIAGONAL CORNERS AND ANCHORED TO THE STRUCTURE ABOVE. ALL 4 FT. X 4 FT. LIGHT FIXTURES MUST HAVE SLACK SAFETY WIRES AT EACH CORNER.
11. ALL FLUSHED OR RECESSED LIGHT FIXTURES AND AIR TERMINALS WEIGHING 56 LBS. OR MORE MUST BE INDEPENDENTLY SUPPORTED BY NOT LESS THAN FOUR (4) TAUT #12 GAGE WIRES, EACH ATTACHED TO THE FIXTURE AND TO THE STRUCTURE ABOVE REGARDLESS OF THE TYPE OF CEILING GRID SYSTEM USED.
12. BUILDING IS LOCATED IN SEISMIC DESIGN CATEGORY D. THE T-BAR CEILING TO BE 'HEAVY DUTY' BASIS OF DESIGN; PRELUDE XL INSTALL PER ASTM C 635 AND ASTM C 636.

12 — TILE CEILING NOTES
3" = 1'-0"

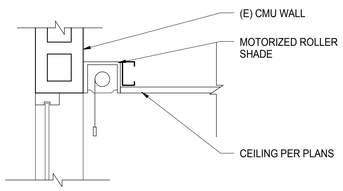

8 — ROLLER SHADE DETAIL
1" = 1'-0"

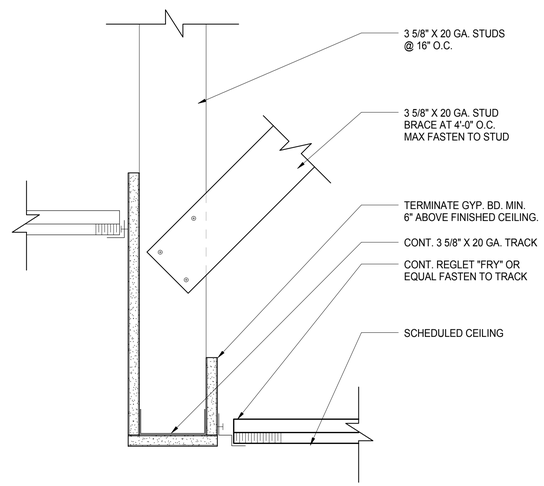

6 — TYPICAL SOFFIT FRAMING
3" = 1'-0"

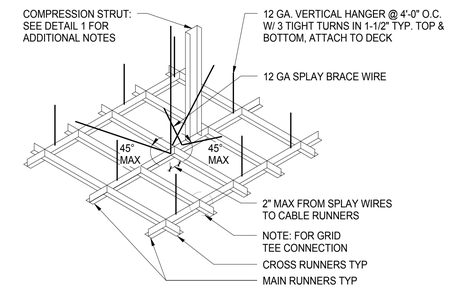

2 — CEILING GRID ATTACHEMENT
NTS

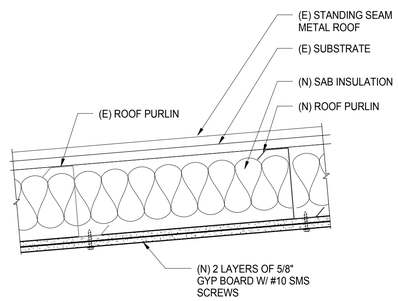

9 — ROOF SECTION AT HIGH ROOF
1 1/2" = 1'-0"

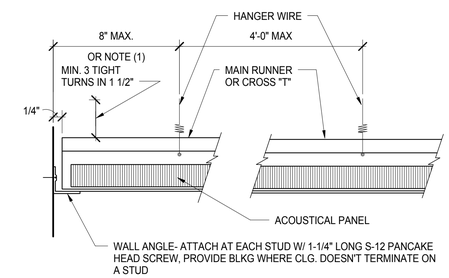

NOTE:

1/4 OF THE LENGTH OF THE END RUNNER, WHICHEVER IS LEAST

3 — ACOUSTIC CEILING DETAIL
NTS

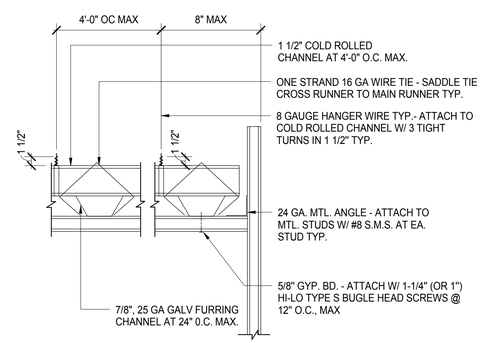

7 — GYP BD CEILING SUPPORT
1" = 1'-0"

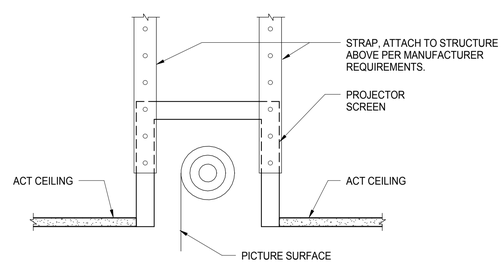

10 — RECESSED PROJECTOR SCREEN
1 1/2" = 1'-0"

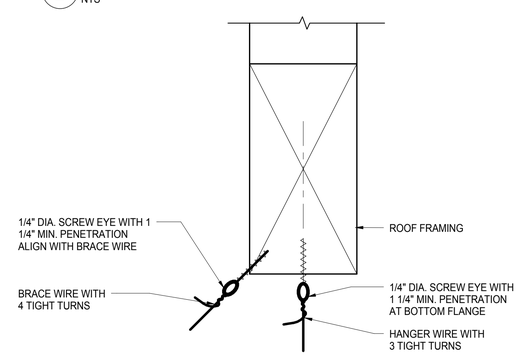

4 — HANGER WIRE ATTACHEMENT
NTS

LAST REVISION: 11/30/2015 1:59:19 PM

KITCHELL
Capital Expenditure Managers
2750 Gateway Oaks Drive
Suite 300
Sacramento, CA. 95833
(916) 648-9700

BCAG BUTTE COUNTY ASSOCIATION OF GOVERNMENTS

BUTTE REGIONAL TRANSIT OPERATIONS CENTER
326 HUSS LANE, CHICO CA

BUTTE COUNTY ASSOCIATION OF GOVERNMENTS

PROJECT STATUS:

BID SET

BUILDINGS:

SHEET TITLE:

CEILING CONNECTION DETAILS

SCALE: 0 1/2 1 — BAR IS ONE INCH ON ORIGINAL DRAWING. IF NOT ONE INCH ON THIS SHEET, ADJUST SCALES ACCORDINGLY

REVISIONS

No.	Description	Date

JOB NO. 5006A3

DATE 12/3/15

SHEET A223

C:\BIM\BCAG TI_hornberger.rvt

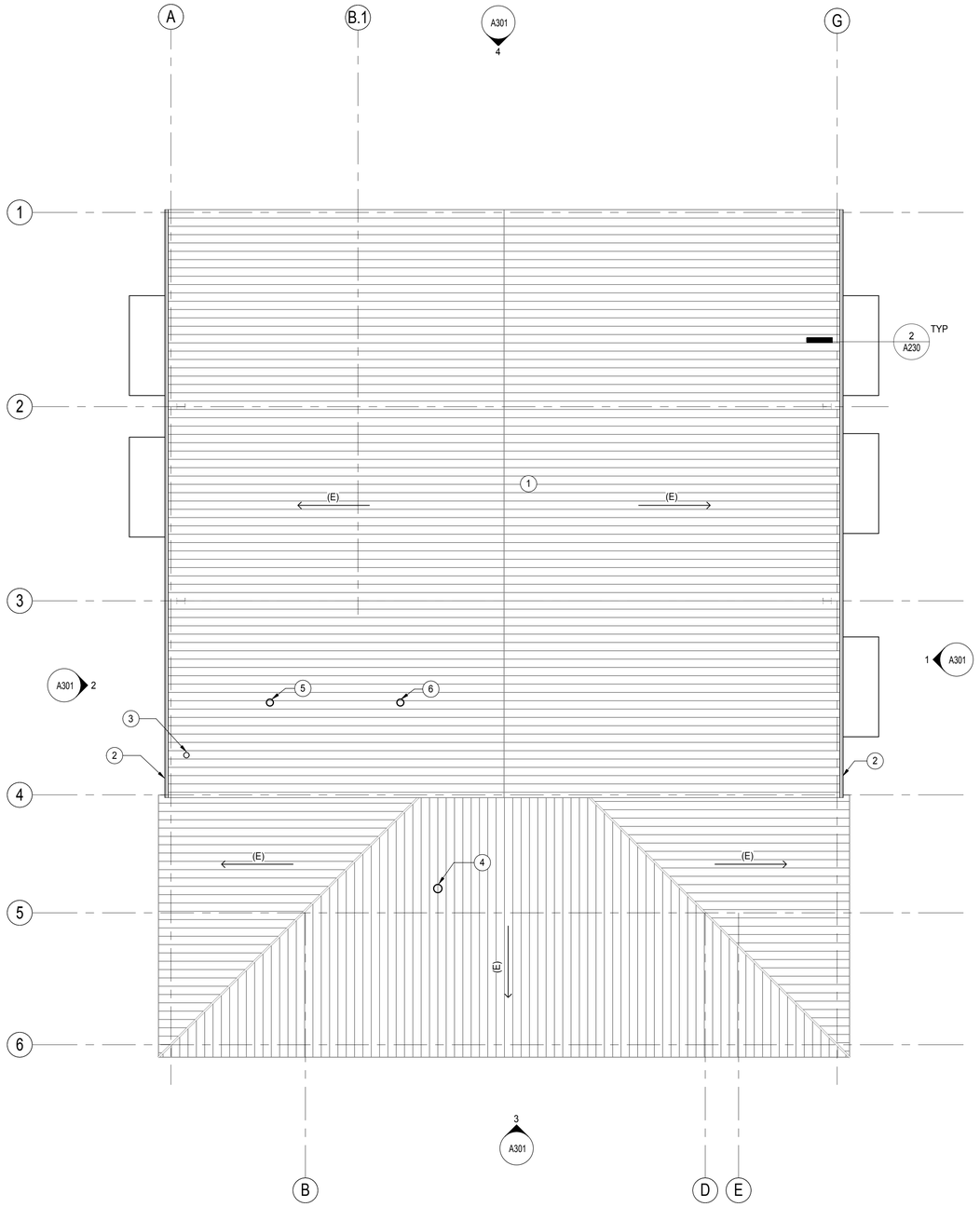

1 ROOF PLAN
1/8" = 1'-0"

KEYNOTES

1. ALL REMAINING ROOF PENETRATIONS TO BE FILLED AND SEALED TO MATCH (E) ROOF CONSTRUCTION. NEW METAL ROOF PANELS TO BE INSTALLED TO REPLACE ANY (E) PANELS WITH HOLES.
2. GUTTER & DOWNSPOUTS TO BE REPLACED IN THEIR ENTIRETY. GC TO PROVIDE ITEMS TO MATCH EXISTING DESIGN INSURE PROPER DRAINAGE AND SPACING.
3. 6" DIA. PENETRATION FOR WATER HEATER COMBINATION FLUE AND COMBUSTION AIR VENT.
4. USE (E) ROOF PENETRATION LOCATION FOR 8" DIA. RELIEF VENTILATION HOOD.
5. 10" DIA. EXHAUST VENTILATION PENETRATION.
6. 12" DIA. RELIEF VENTILATION PENETRATION.

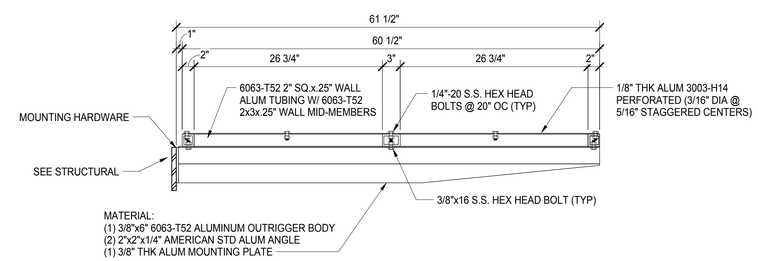

2 CANOPY SECTION
NTS

KITCHELL
Capital Expenditure Managers
2750 Gateway Oaks Drive
Suite 300
Sacramento, CA. 95833
(916) 648-9700

BCAG BUTTE COUNTY ASSOCIATION OF GOVERNMENTS

BUTTE REGIONAL TRANSIT OPERATIONS CENTER
326 HUSS LANE, CHICO CA

BUTTE COUNTY ASSOCIATION OF GOVERNMENTS

PROJECT STATUS:
BID SET
BUILDINGS:

SHEET TITLE:
ROOF PLAN

SCALE: 0 1/2 1
BAR IS ONE INCH ON ORIGINAL DRAWING. IF NOT ONE INCH ON THIS SHEET, ADJUST SCALES ACCORDINGLY

REVISIONS

No.	Description	Date

JOB NO. 5006A3
DATE 12/3/15
SHEET A230

LAST REVISION: 11/30/2015 1:59:20 PM

C:\BIM\BCAG TI_hornberger.rvt

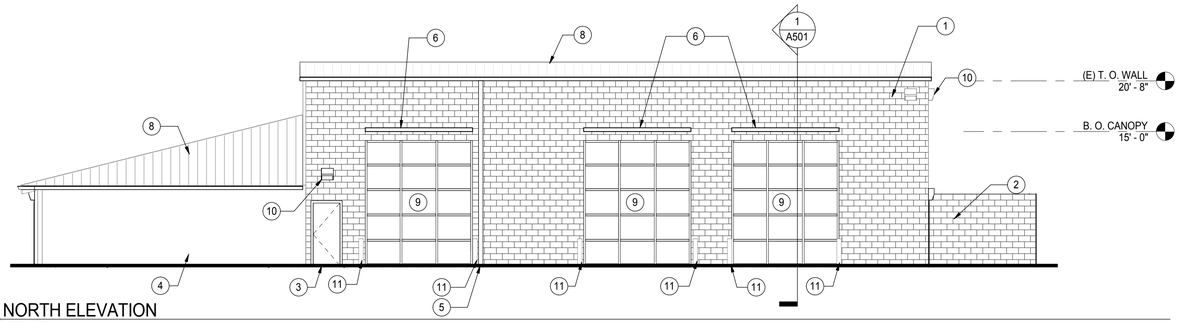

1 NORTH ELEVATION
1/8" = 1'-0"

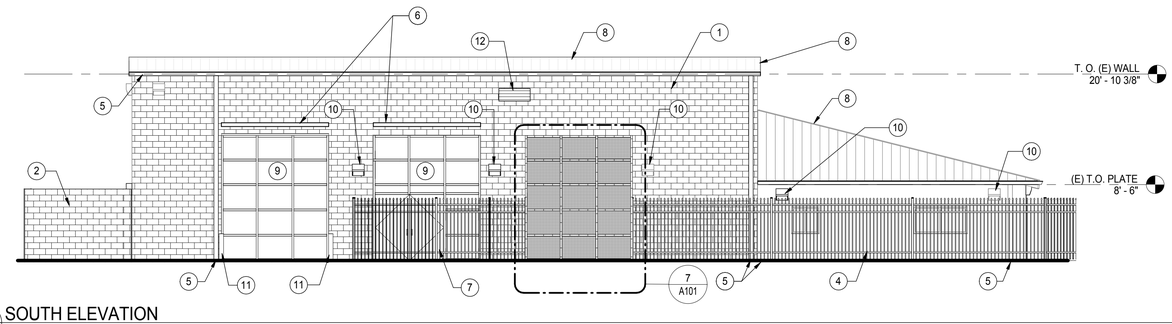

2 SOUTH ELEVATION
1/8" = 1'-0"

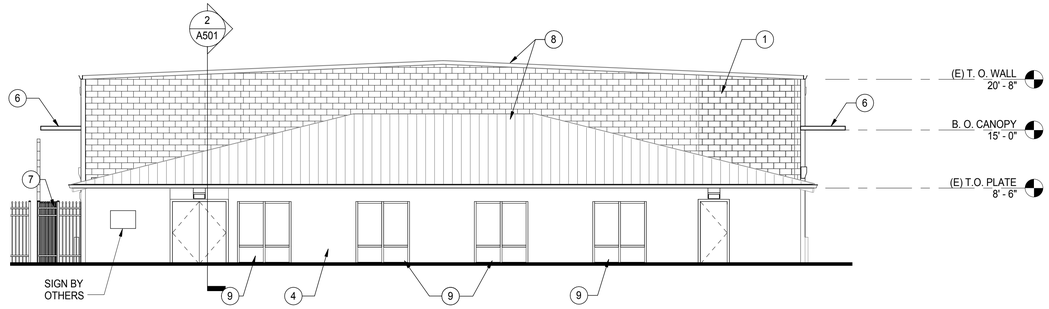

3 EAST ELEVATION
1/8" = 1'-0"

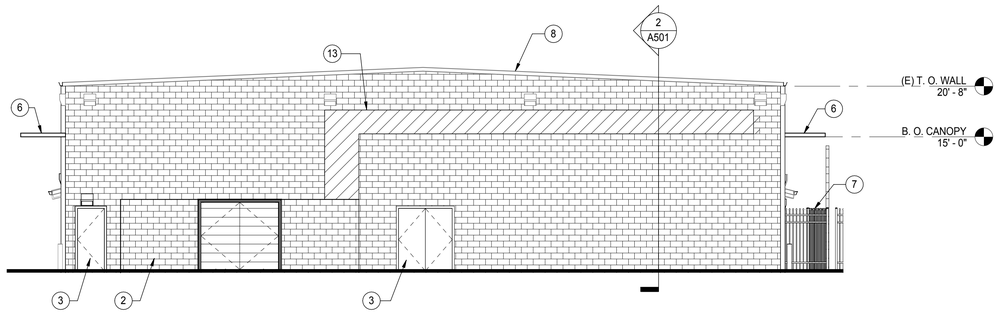

4 WEST ELEVATION
1/8" = 1'-0"

KEYNOTES

1 EXISTING CMU WALL, PAINT EP1.
2 CMU WALL, PAINT EP1.
3 DOOR, EP2 FINISH.
4 EXISTING CEMENT PLASTER WALL, PAINT EP1.
5 GUTTER & DOWNSPOUT, EP4 FINISH.
6 METAL SHADE CANOPY, EP2 FINISH.
7 ORNAMENTAL METAL GATE, FACTORY FINISH.
8 EXISTING ROOF TO REMAIN.
9 STOREFRONT SYSTEM, SEE A701.
10 EXTERIOR LIGHTING, SEE ELECTRICAL DRAWINGS.
11 PAINT (E) BOLLARD - EP1
12 LOUVER, PAINT - EP1
13 RUN PIPING AS SHOWN AND COORDINATE W/ MECHANICAL PLANS. PAINT PIPE - EP1. PAINT WALL PRIOR TO INSTALLATION OF PIPE ENCLOSURE.

EXTERIOR FINISH SCHEDULE

ID	MATERIAL	REMARKS
EP1	PAINT - DUNN EDWARDS DE6367 'COVERED IN PLATINUM'	
EP2	METAL - POWDER COAT PAINT TO MATCH DUNN EDWARDS - DE6369 - 'LEGENDARY GRAY'	
EP3	METAL - POWER COAT PAINT TO MATCH DUNN EDWARDS - DE5713 - 'PINE HAYEN'	
EP4	METAL - POWER COAT PAINT TO MATCH DUNN EDWARDS DE6367 - 'COVERED IN PLATINUM'	

KITCHELL
Capital Expenditure Managers
2750 Gateway Oaks Drive
Suite 300
Sacramento, CA. 95833
(916) 648-9700

BCAG BUTTE COUNTY ASSOCIATION OF GOVERNMENTS

BUTTE REGIONAL TRANSIT OPERATIONS CENTER
326 HUSS LANE, CHICO CA

BUTTE COUNTY ASSOCIATION OF GOVERNMENTS

PROJECT STATUS:
BID SET
BUILDINGS:

SHEET TITLE:
EXTERIOR ELEVATIONS

SCALE: 0 1/2 1 BAR IS ONE INCH ON ORIGINAL DRAWING. IF NOT ONE INCH ON THIS SHEET, ADJUST SCALES ACCORDINGLY

REVISIONS

No.	Description	Date

JOB NO. 5006A3
DATE 12/3/15
SHEET A301

LAST REVISION: 11/30/2015 1:59:24 PM

C:\BIM\BCAG TI_hornberger.rvt

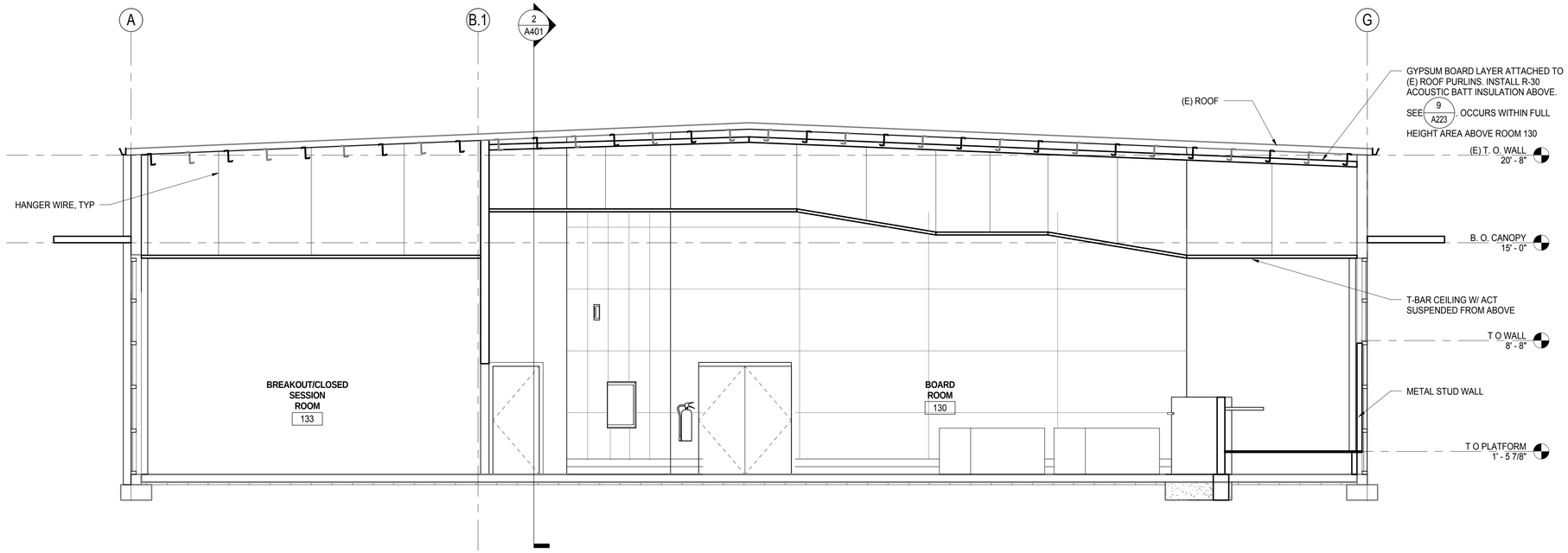

1 BUILDING SECTION 1
1/4" = 1'-0"

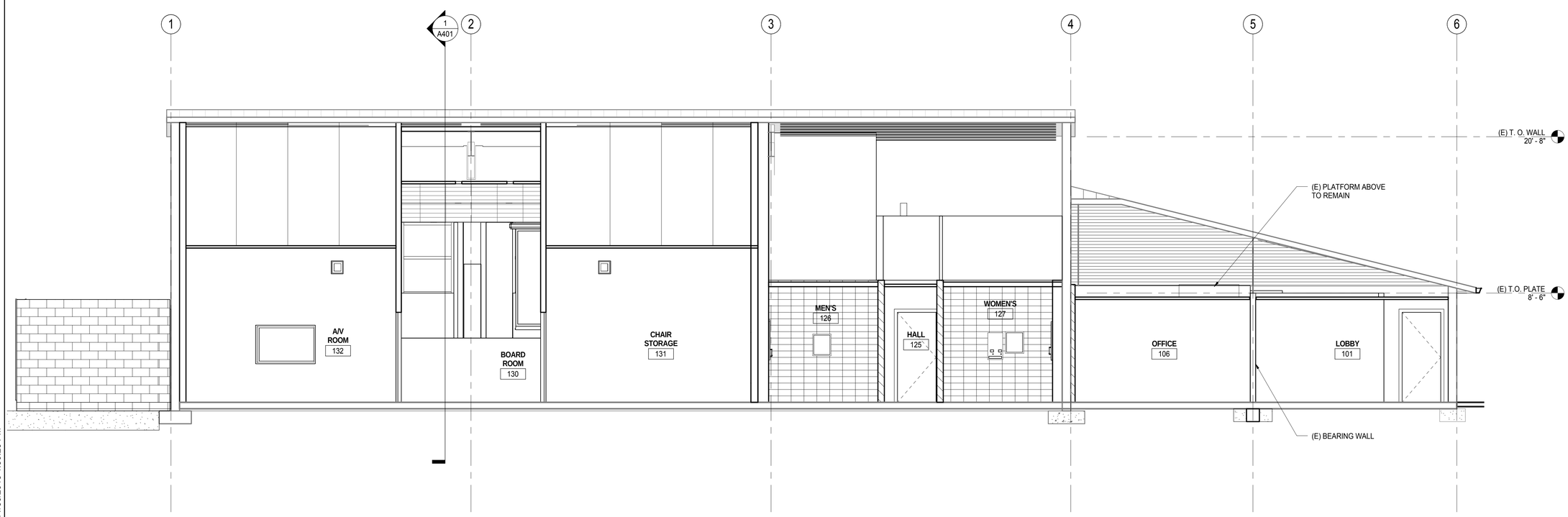

2 BUILDING SECTION 2
1/4" = 1'-0"

LAST REVISION: 11/30/2015 1:59:25 PM

KITCHELL
Capital Expenditure Managers
2750 Gateway Oaks Drive
Suite 300
Sacramento, CA. 95833
(916) 648-9700

BCAG BUTTE COUNTY ASSOCIATION OF GOVERNMENTS

BUTTE REGIONAL TRANSIT OPERATIONS CENTER
326 HUSS LANE, CHICO CA

BUTTE COUNTY ASSOCIATION OF GOVERNMENTS

PROJECT STATUS:
BID SET
BUILDINGS:

SHEET TITLE:
BUILDING SECTIONS

SCALE: 0 1/2 1 BAR IS ONE INCH ON ORIGINAL DRAWING. IF NOT ONE INCH ON THIS SHEET, ADJUST SCALES ACCORDINGLY

REVISIONS

No.	Description	Date

JOB NO. 5006A3
DATE 12/3/15
SHEET A401

C:\BIM\BCAG TI_hornberger.rvt

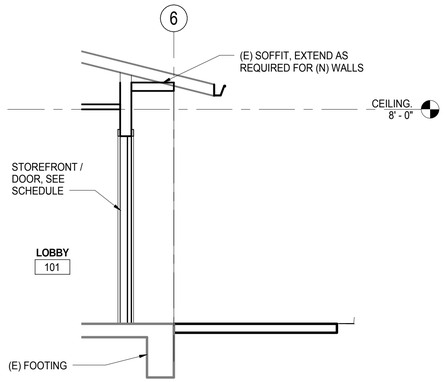

2 WALL SECTION 2
3/8" = 1'-0"

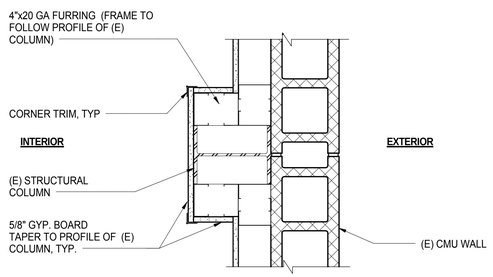

3 ENLARGED WALL FRAMING PLAN @ RIGID FRAME
1 1/2" = 1'-0"

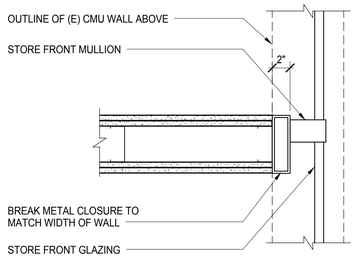

4 BREAK METAL DETAIL
1 1/2" = 1'-0"

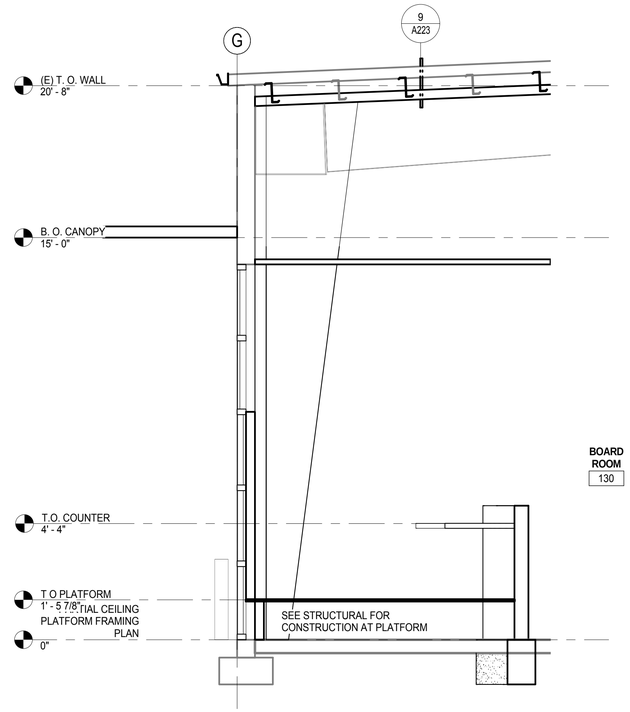

1 WALL SECTION 1
3/8" = 1'-0"

KITCHELL
Capital Expenditure Managers
2750 Gateway Oaks Drive
Suite 300
Sacramento, CA. 95833
(916) 648-9700

BCAG BUTTE COUNTY ASSOCIATION OF GOVERNMENTS

BUTTE REGIONAL TRANSIT OPERATIONS CENTER
326 HUSS LANE, CHICO CA

BUTTE COUNTY ASSOCIATION OF GOVERNMENTS

PROJECT STATUS:
BID SET
BUILDINGS:

SHEET TITLE:
WALL SECTIONS & DETAILS

SCALE: 0 1/2 1 BAR IS ONE INCH ON ORIGINAL DRAWING. IF NOT ONE INCH ON THIS SHEET, ADJUST SCALES ACCORDINGLY

REVISIONS

No.	Description	Date

JOB NO. 5006A3
DATE 12/3/15
SHEET A501

C:\BIM\BCAG TI_homberger.rvt

LAST REVISION: 11/30/2015 1:59:26 PM

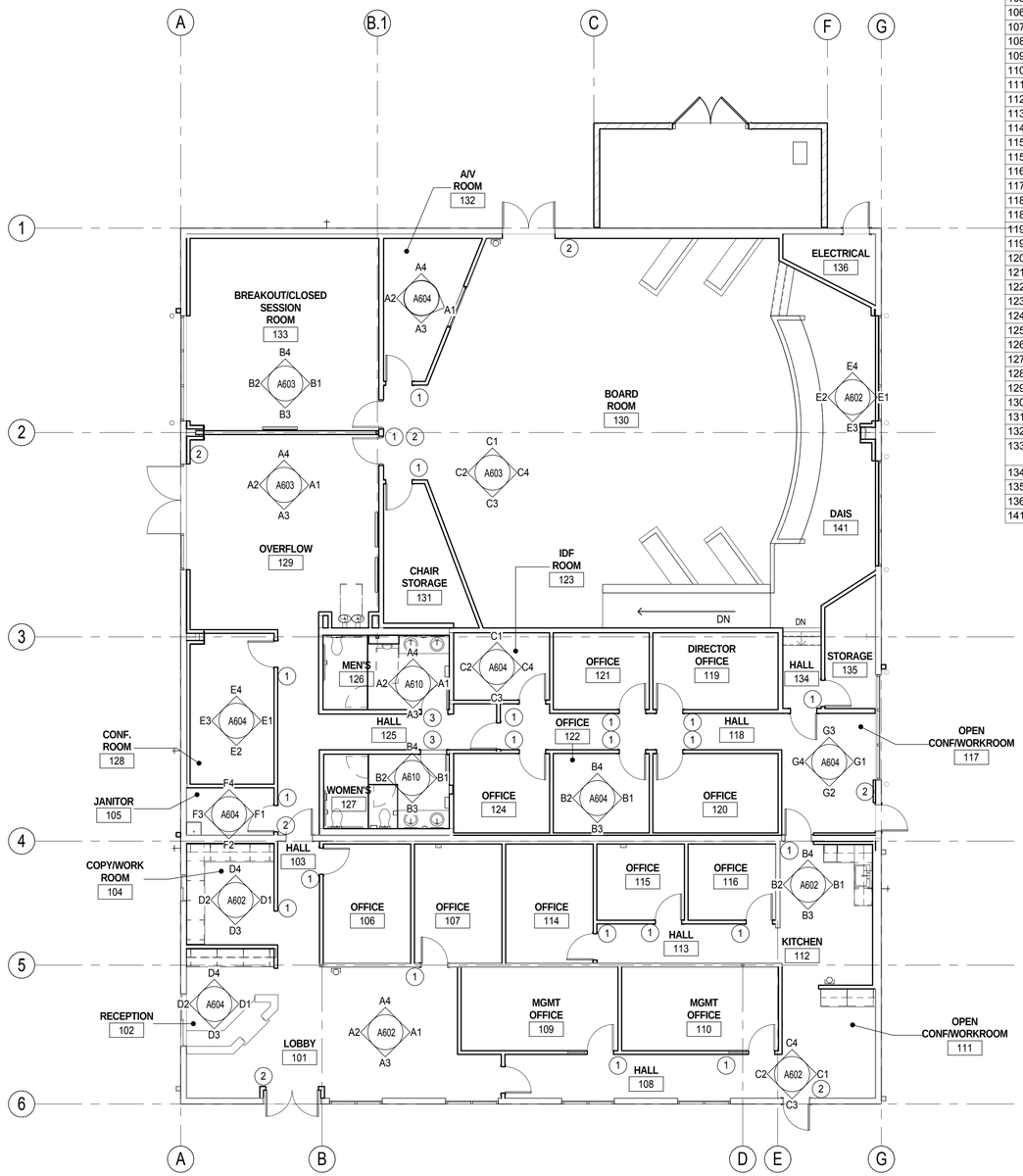

1 SIGNAGE PLAN / INTERIOR ELEVATIONS CALL OUT
1/8" = 1'-0"

ROOM FINISH SCHEDULE

ROOM #	ROOM NAME	FLOOR FINISH	BASE	WALL FINISH NORTH	WALL FINISH SOUTH	WALL FINISH EAST	WALL FINISH WEST	CEILING FINISH	COMMENTS
101	LOBBY	C1	B1	P1	P1	P1	P1	APC1	
102	RECEPTION	C1	B1	P1	P1	P1	P1	APC1	
103	HALL	C1	B1	P1	P1	P1	P1	APC1	
104	COPY/WORK ROOM	C1	B1	P1	P1	P1	P1	APC1	
105	JANITOR	RF1	B1	P1	P1	P1	P1	OTS	
106	OFFICE	C2	B1	P1	P1	P1	P1	APC1	
107	OFFICE	C2	B1	P1	P1	P1	P1	APC1	
108	HALL	C2	B1	P1	P1	P1	P1	APC1	
109	MGMT OFFICE	C1	B1	P1	P1	P1	P1	APC1	
110	MGMT OFFICE	C2	B1	P1	P1	P1	P1	APC1	
111	OPEN CONF/WORKROOM	C1	B1	P1	P1	P1	P1	APC1	
112	KITCHEN	RF1	B1	P1	P1	P1	P1	APC1	
113	HALL	C1	B1	P1	P1	P1	P1	APC1	
114	OFFICE	C2	B1	P1	P1	P1	P1	APC1	
115	OFFICE	C2	B1	P1	P1	P1	P1	APC1	
115	OFFICE	C2	B1	P1	P1	P1	P1	APC1	
116	OFFICE	C2	B1	P1	P1	P1	P1	APC1	
117	OPEN CONF/WORKROOM	C1	B1	P1	P1	P1	P1	APC1	
118	COPY/WORK ROOM	C1	B1	P1	P1	P1	P1	APC1	
118	HALL	C1	B1	P1	P1	P1	P1	APC1	
119	OFFICE	C2	B1	P1	P1	P1	P1	APC1	
119	DIRECTOR OFFICE	C2	B1	P1	P1	P1	P1	APC1	
120	OFFICE	C2	B1	P1	P1	P1	P1	APC1	
121	OFFICE	C2	B1	P1	P1	P1	P1	APC1	
122	OFFICE	C2	B1	P1	P1	P1	P1	APC1	
123	IDF ROOM	RF2	RF2	P1	P1	P1	P1	APC1	
124	OFFICE	C2	B1	P1	P1	P1	P1	APC1	
125	HALL	C1	B1	P1	P1	P1	P1	APC1	
126	MEN'S	T1	T1	T2	T2	T2	T2	P1	
127	WOMEN'S	T1	T1	T2	T2	T2	T2	P1	
128	CONF. ROOM	C1	B1	P1	P1	P1	P1	APC1	
129	OVERFLOW	C1	B1	P1	P1	P1	P1	APC1	
130	BOARD ROOM	C1	B1	P1	P1	P1	P1	APC1	
131	CHAIR STORAGE	C2	B1	P1	P1	P1	P1	APC1	
132	A/V ROOM	C2	B1	P1	P1	P1	P1	APC1	
133	BREAKOUT/CLOSED SESSION ROOM	C1	B1	P1	P1	P1	P1	APC1	
134	HALL	C1	B1	P1	P1	P1	P1	APC1	
135	STORAGE	RF1	B1	P1	P1	P1	P1	OTS	
136	ELECTRICAL	C01	B1	P1	P1	P1	P1	OTS	
141	DAIS	C2	B1	P1	P1	P1	P1	APC1	

MATERIALS LEGEND

DESIGNATION	FINISH	DESCRIPTION
C01	SEALED CONCRETE	
T1	FLOOR TILE	6"x6" / DALTILE - NATURAL HUES - CH08 CINDER W/ ABRASIVE FINISH
T2	WALL TILE	6"x12" / DALTILE - NATURAL HUES - CH24 IVORY
T3	WALL TILE	6"x12" / DALTILE - NATURAL HUES - QH82 ICEBERG
APC1	ACOUSTIC PANEL CEILING	ECOPHON GEDINA 'A' 2'x2'
B1	RESILIENT BASE	ROPPE / 174 SMOKE
RF1	LINOLEUM FLOORING	ARMSTRONG / COLORETTE / LP371 HALF BAKED
RF2	STATIC CONTROL FLOORING	NORA / ENVIROCARE / ART 2462 / WINDFLOWER (2930) - 24"x24" LOVE BASE TO MATCH
P1	PAINT	DUNN EDWARDS / DEW316 POWDERED
P2	PAINT	DUNN EDWARDS / DE6331 BAY OF HOPE
P3	PAINT	DUNN EDWARDS / DE6366 SILVER SPOON
P4	PAINT	DUNN EDWARDS / DE5354 HONEY GLOW
WD1	WOOD FINISH	MATA VERDE / SANTA MARIA
WD2	WOOD LAMINATE	WILSONART HUNTINGTON MAPLE
SSM1	SOLID SURFACE	CORIAN - ANTHRACITE
SSM2	COUNTERTOP	PAPER STONE / GUN METAL
FRAP	FABRIC WRAPPED ACOUSTIC PANEL	KINETICS NOISE CONTROL - HARDSIDE - 1" THICK. 4' x 10' MAX PANEL - COORDINATE COLORS AND EDGE CONDITIONS W/ ARCHITECT
FRP	FIBER REINFORCED PANEL	NUDE / FIBERLITE / PEARL (750)
PL2	PLASTIC LAMINATE	FORMICA / 6610-58 ENDLESS GRAYTONE

SIGNAGE PLAN - SIGN CALLOUTS

1. ROOM IDENTIFICATION SIGNAGE, SEE 3/A703
2. EXIT SIGN, SEE 1/A703
3. ACCESSIBLE REST ROOM SIGNAGE, SEE 4/A610 & 5/A610

KITCHELL
Capital Expenditure Managers
2750 Gateway Oaks Drive
Suite 300
Sacramento, CA. 95833
(916) 648-9700

BCAG BUTTE COUNTY ASSOCIATION OF GOVERNMENTS

BUTTE REGIONAL TRANSIT OPERATIONS CENTER
326 HUSS LANE, CHICO CA

BUTTE COUNTY ASSOCIATION OF GOVERNMENTS

PROJECT STATUS:
BID SET
BUILDINGS:

SHEET TITLE:
SIGNAGE PLAN & ROOM FINISH SCHEDULE

SCALE: 0 1/2 1 BAR IS ONE INCH ON ORIGINAL DRAWING. IF NOT ONE INCH ON THIS SHEET, ADJUST SCALES ACCORDINGLY

REVISIONS

No.	Description	Date

JOB NO. 5006A3
DATE 12/3/15
SHEET A601

LAST REVISION: 11/30/2015 1:59:27 PM

C:\BIM\BCAG TI_hornberger.rvt

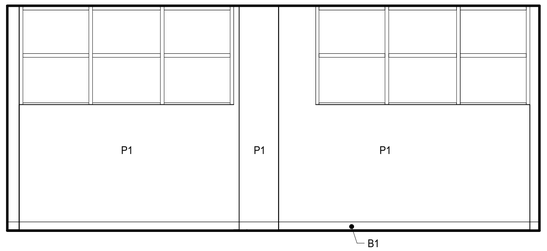

E1 DAIS 141 - NORTH
1/4" = 1'-0"

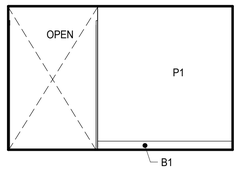

C2 OPEN CONF 111 - SOUTH
1/4" = 1'-0"

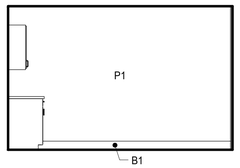

C1 OPEN CONF 111 - NORTH
1/4" = 1'-0"

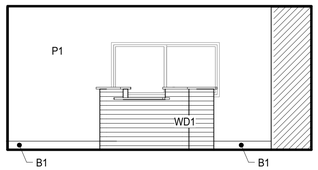

A2 LOBBY 101 - SOUTH
1/4" = 1'-0"

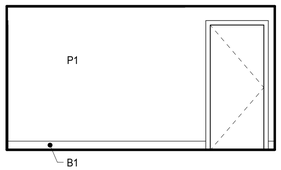

A1 LOBBY 101 - NORTH
1/4" = 1'-0"

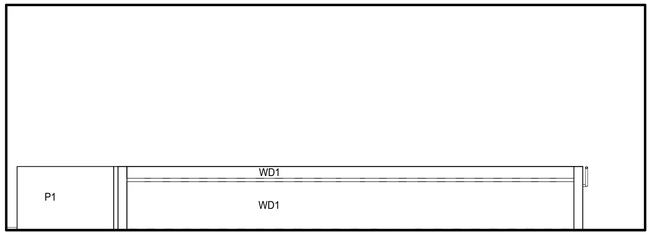

E2 DAIS 141 - SOUTH
1/4" = 1'-0"

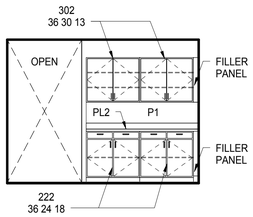

C4 OPEN CONF 111 - WEST
1/4" = 1'-0"

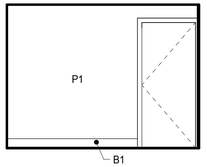

C3 OPEN CONF 111 - EAST
1/4" = 1'-0"

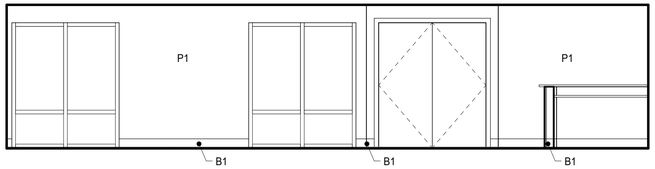

A3 LOBBY 101 - EAST
1/4" = 1'-0"

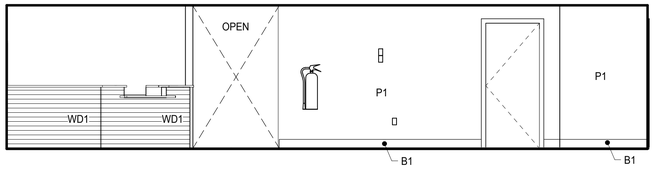

A4 LOBBY 101 - WEST
1/4" = 1'-0"

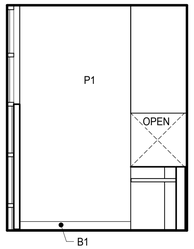

E3 DAIS 141 - EAST
1/4" = 1'-0"

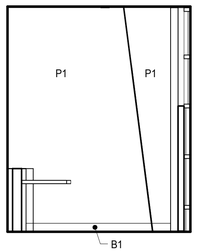

E4 DAIS 141 - WEST
1/4" = 1'-0"

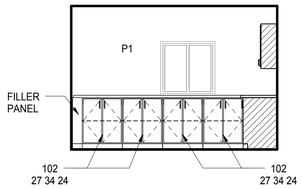

D2 COPY/WORK 104 - SOUTH
1/4" = 1'-0"

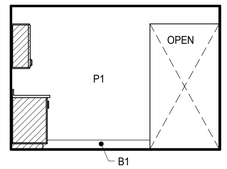

D1 COPY/WORK 104 - NORTH
1/4" = 1'-0"

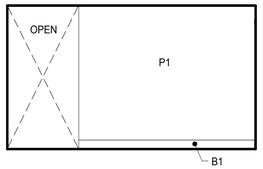

B2 KITCHEN 112 - SOUTH
1/4" = 1'-0"

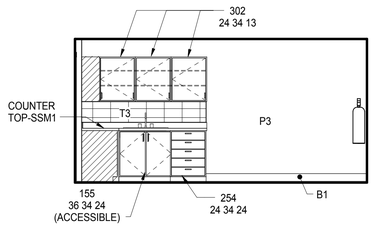

B1 KITCHEN 112 - NORTH
1/4" = 1'-0"

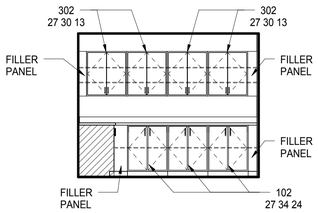

D4 COPY/WORK 104 - WEST
1/4" = 1'-0"

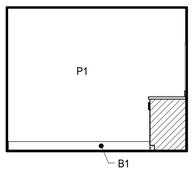

D3 COPY/WORK 104 - EAST
1/4" = 1'-0"

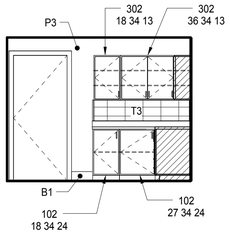

B4 KITCHEN 112 - WEST
1/4" = 1'-0"

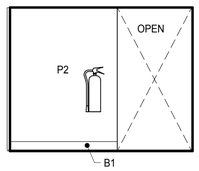

B3 KITCHEN 112 - EAST
1/4" = 1'-0"

KITCHELL
Capital Expenditure Managers
2750 Gateway Oaks Drive
Suite 300
Sacramento, CA. 95833
(916) 648-9700

BCAG BUTTE COUNTY ASSOCIATION OF GOVERNMENTS

BUTTE REGIONAL TRANSIT OPERATIONS CENTER
326 HUSS LANE, CHICO CA

BUTTE COUNTY ASSOCIATION OF GOVERNMENTS

PROJECT STATUS:
BID SET
BUILDINGS:

SHEET TITLE:
INTERIOR ELEVATIONS

SCALE: 0 1/2 1 BAR IS ONE INCH ON ORIGINAL DRAWING. IF NOT ONE INCH ON THIS SHEET, ADJUST SCALES ACCORDINGLY

REVISIONS

No.	Description	Date

JOB NO. 5006A3
DATE 12/3/15
SHEET A602

C:\BIM\BCAG TI_homberger.rvt

LAST REVISION: 11/30/2015 1:59:30 PM

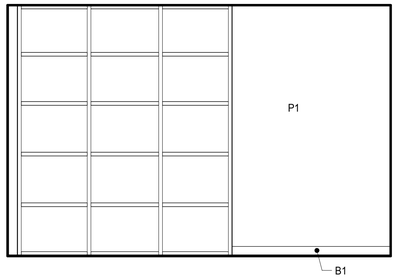

B2 BREAKOUT 133 - SOUTH
1/4" = 1'-0"

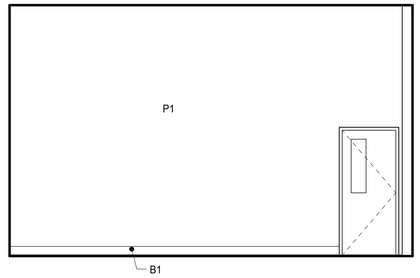

B1 BREAKOUT 133 - NORTH
1/4" = 1'-0"

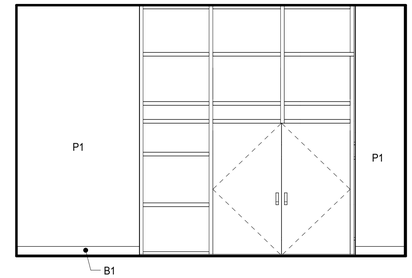

A2 OVERFLOW 129 - SOUTH
1/4" = 1'-0"

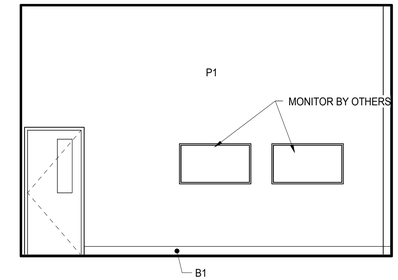

A1 OVERFLOW 129 - NORTH
1/4" = 1'-0"

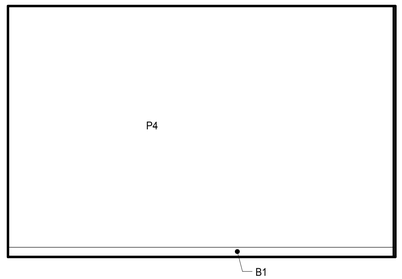

B4 BREAKOUT 133 - WEST
1/4" = 1'-0"

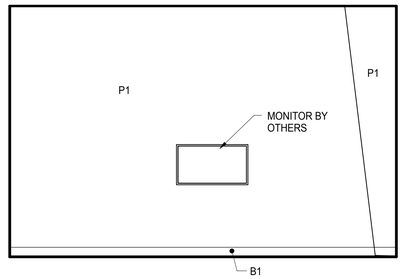

B3 BREAKOUT 133 - EAST
1/4" = 1'-0"

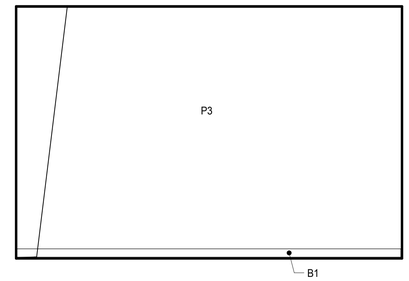

A4 OVERFLOW 129 - WEST
1/4" = 1'-0"

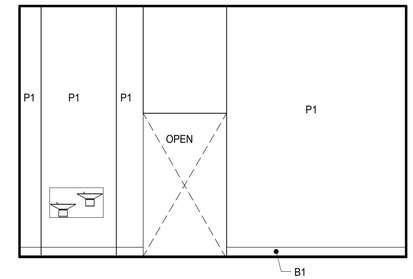

A3 OVERFLOW 129 - EAST
1/4" = 1'-0"

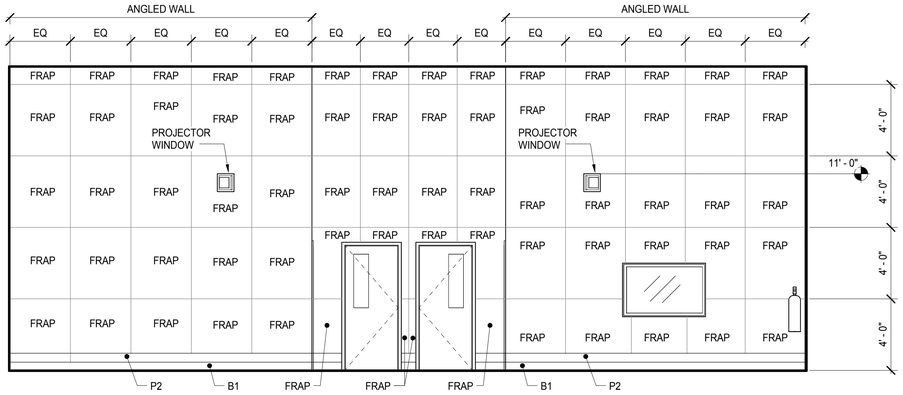

C2 BOARD ROOM - SOUTH ELEVATION
1/4" = 1'-0"

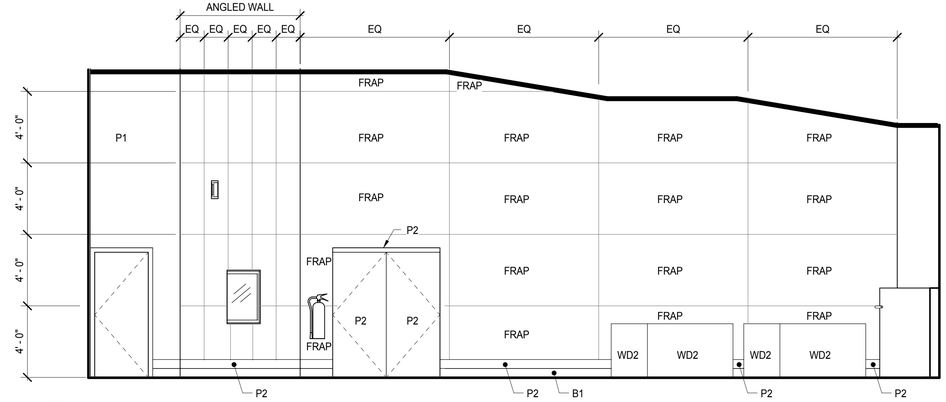

C1 BOARD ROOM - WEST ELEVATION
1/4" = 1'-0"

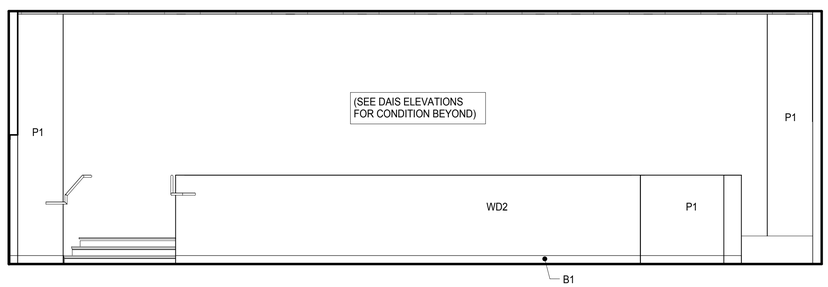

C4 BOARD ROOM - NORTH ELEVATION
1/4" = 1'-0"

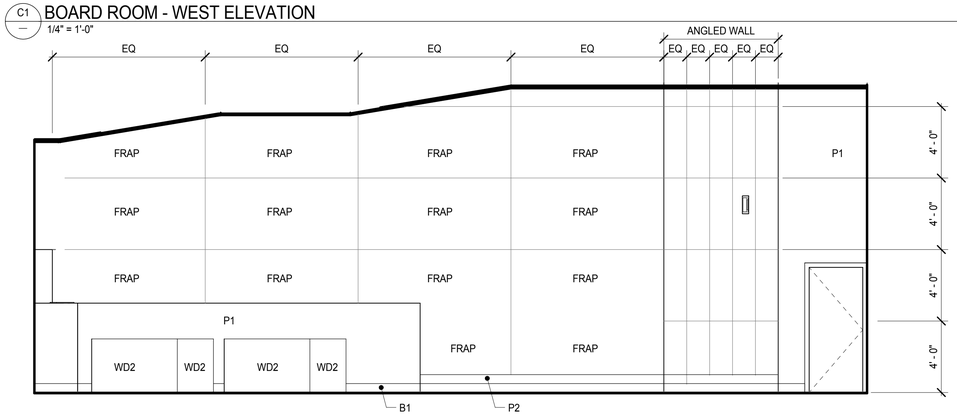

C3 BOARD ROOM - EAST ELEVATION
1/4" = 1'-0"

KITCHELL
Capital Expenditure Managers
2750 Gateway Oaks Drive
Suite 300
Sacramento, CA. 95833
(916) 648-9700

BCAG BUTTE COUNTY ASSOCIATION OF GOVERNMENTS

BUTTE REGIONAL TRANSIT OPERATIONS CENTER
326 HUSS LANE, CHICO CA

BUTTE COUNTY ASSOCIATION OF GOVERNMENTS

PROJECT STATUS:
BID SET
BUILDINGS:

SHEET TITLE:
INTERIOR ELEVATIONS

SCALE: 0 1/2 1 BAR IS ONE INCH ON ORIGINAL DRAWING. IF NOT ONE INCH ON THIS SHEET, ADJUST SCALES ACCORDINGLY

REVISIONS

No.	Description	Date

JOB NO. 5006A3
DATE 12/3/15
SHEET A603

C:\BIM\BCAG TI_hornberger.rvt

LAST REVISION: 11/30/2015 1:59:31 PM

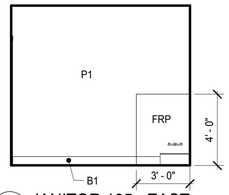

F2 JANITOR 105 - EAST
1/4" = 1'-0"

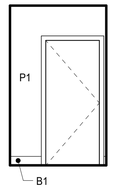

F1 JANITOR 105 - NORTH
1/4" = 1'-0"

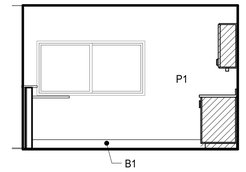

D2 RECEPTION 102 - SOUTH
1/4" = 1'-0"

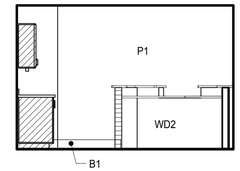

D1 RECEPTION 102 - NORTH
1/4" = 1'-0"

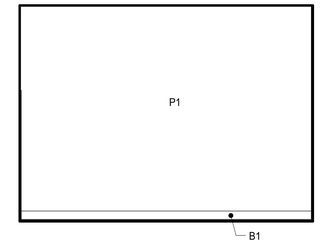

A2 AV 132 - SOUTH
1/4" = 1'-0"

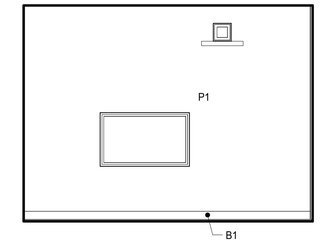

A1 AV 132 - NORTH
1/4" = 1'-0"

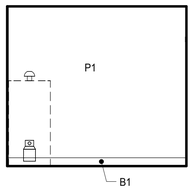

F4 JANITOR 105 - WEST
1/4" = 1'-0"

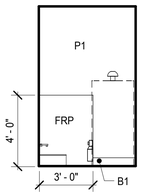

F3 JANITOR 105 - SOUTH
1/4" = 1'-0"

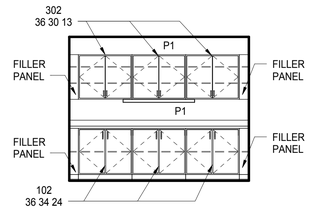

D4 RECEPTION 102 - WEST
1/4" = 1'-0"

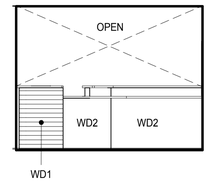

D3 RECEPTION 102 - EAST
1/4" = 1'-0"

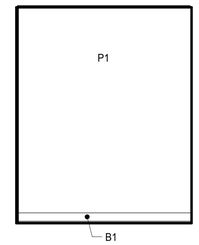

A4 AV 132 - WEST
1/4" = 1'-0"

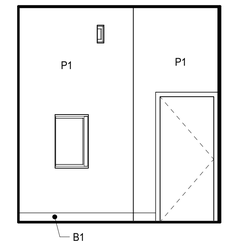

A3 AV 132 - EAST
1/4" = 1'-0"

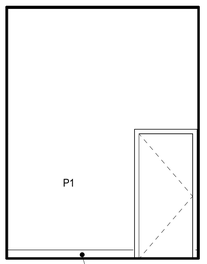

G2 WORKROOM 117 -EAST
1/4" = 1'-0"

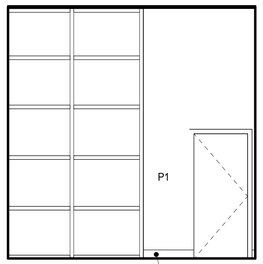

G1 WORKROOM 117 -NORTH
1/4" = 1'-0"

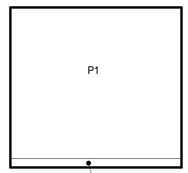

E2 CONFERENCE ROOM 128 - EAST
1/4" = 1'-0"

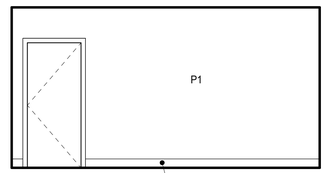

E1 CONFERENCE ROOM 128 - NORTH
1/4" = 1'-0"

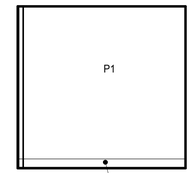

B2 OFFICE 122 (TYP) - SOUTH
1/4" = 1'-0"

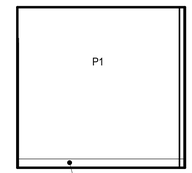

B1 OFFICE 122 (TYP) - NORTH
1/4" = 1'-0"

NOTE:
ALL OFFICE FINISHES ARE SIMILAR TO ROOM 122

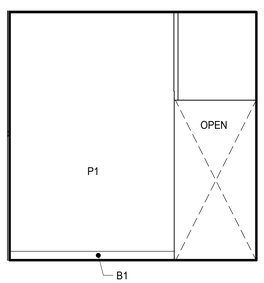

G4 WORKROOM 117 -SOUTH
1/4" = 1'-0"

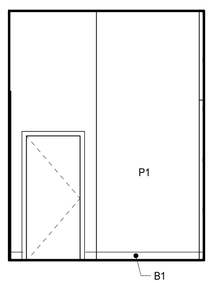

G3 WORKROOM 117 -WEST
1/4" = 1'-0"

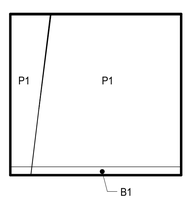

E4 CONFERENCE ROOM 128 - WEST
1/4" = 1'-0"

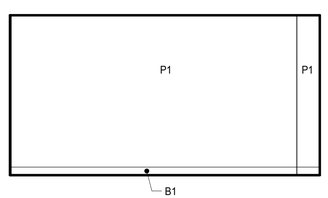

E3 CONFERENCE ROOM 128 - SOUTH
1/4" = 1'-0"

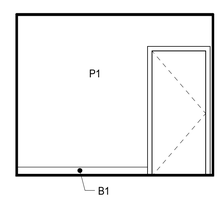

B4 OFFICE 122 (TYP) - WEST
1/4" = 1'-0"

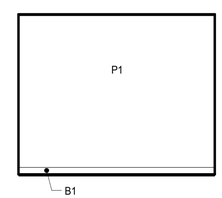

B3 OFFICE 122 (TYP) - EAST
1/4" = 1'-0"

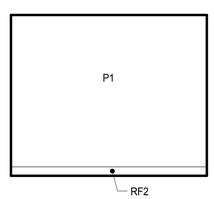

C1 SERVER ROOM 123 - WEST
1/4" = 1'-0"

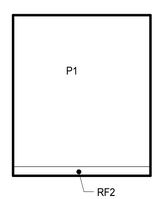

C2 SERVER ROOM 123 - SOUTH
1/4" = 1'-0"

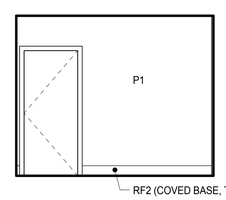

C3 SERVER ROOM 123 - EAST
1/4" = 1'-0"

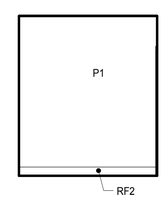

C4 SERVER ROOM 123 - NORTH
1/4" = 1'-0"

KITCHELL
Capital Expenditure Managers
2750 Gateway Oaks Drive
Suite 300
Sacramento, CA. 95833
(916) 648-9700

BCAG BUTTE COUNTY ASSOCIATION OF GOVERNMENTS

BUTTE REGIONAL TRANSIT OPERATIONS CENTER
326 HUSS LANE, CHICO CA

BUTTE COUNTY ASSOCIATION OF GOVERNMENTS

PROJECT STATUS:
BID SET
BUILDINGS:

SHEET TITLE:
INTERIOR ELEVATIONS

SCALE: 0 1/2 1 BAR IS ONE INCH ON ORIGINAL DRAWING. IF NOT ONE INCH ON THIS SHEET, ADJUST SCALES ACCORDINGLY

REVISIONS

No.	Description	Date

JOB NO. 5006A3
DATE 12/3/15
SHEET A604

C:\BIM\BCAG TI_hornberger.rvt

LAST REVISION: 11/30/2015 1:59:32 PM

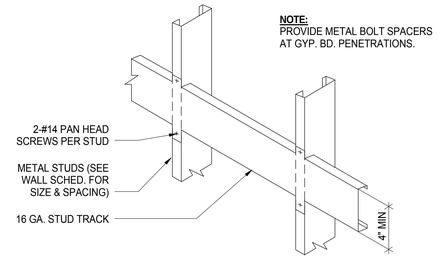

A STANDARD WEIGHT MOUNTING-50 lbs. WEIGHT, MAX. (MIRRORS, WASTE RECEPTACLES, TOWEL DISPENSERS, ETC.)

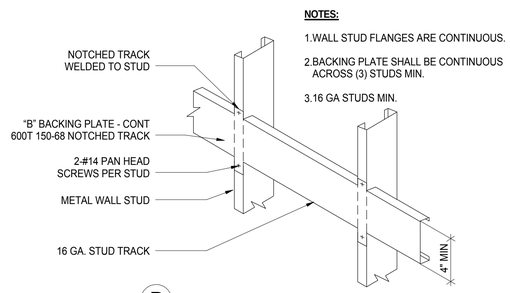

B HEAVY WEIGHT MOUNTING-OVER 50 lbs. WEIGHT

4 — METAL STUD BLOCKING / BACKING PLATE
12" = 1'-0"

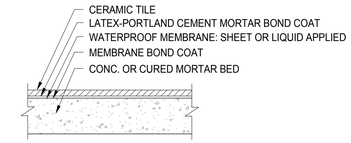

1 — CERAMIC FLOOR TILE @ CONC SLAB
1/8" = 1'-0"

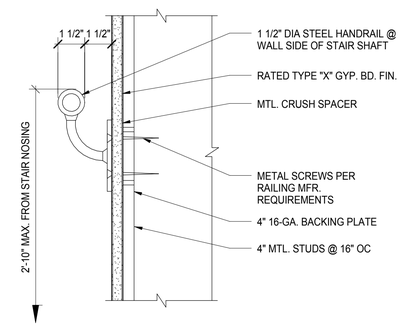

2 — HANDRAIL ATTACHMENT AT WALL
3" = 1'-0"

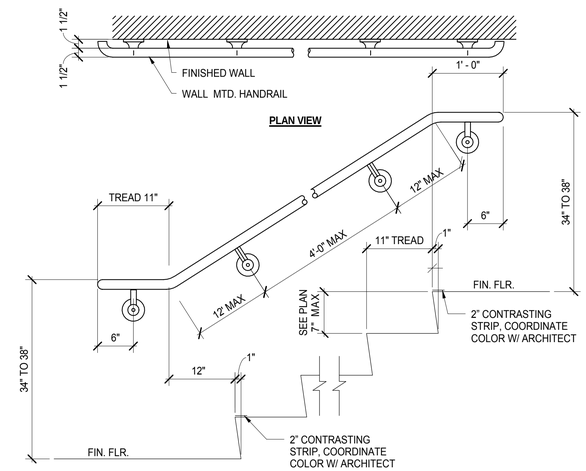

3 — HANDRAIL / STAIR DETAIL, TYP
1" = 1'-0"

KITCHELL
Capital Expenditure Managers
2750 Gateway Oaks Drive
Suite 300
Sacramento, CA. 95833
(916) 648-9700

BCAG BUTTE COUNTY ASSOCIATION OF GOVERNMENTS

BUTTE REGIONAL TRANSIT OPERATIONS CENTER
326 HUSS LANE, CHICO CA

BUTTE COUNTY ASSOCIATION OF GOVERNMENTS

PROJECT STATUS:
BID SET
BUILDINGS:

SHEET TITLE:
ARCHITECTURAL DETAILS

SCALE: 0 1/2 1 BAR IS ONE INCH ON ORIGINAL DRAWING. IF NOT ONE INCH ON THIS SHEET, ADJUST SCALES ACCORDINGLY

REVISIONS

No.	Description	Date

JOB NO. 5006A3
DATE 12/3/15
SHEET A605

LAST REVISION: 11/30/2015 1:59:33 PM

C:\BIM\BCAG TI_homberger.rvt

KEYNOTES

1 TOILET COMPARTMENTS - STAINLESS STEEL, OVERHEAD BRACED
2 TOILET COMPARTMENTS - STAINLESS STEEL, URINAL SCREEN
3 TOILET TISSUE (ROLL) DISPENSER - SURFACE MOUNT
4 COMBINATION PAPER TOWEL DISPENSER / WASTE RECEPTACLE
5 LIQUID SOAP DISPENSER
6 GRAB BAR - 36"
7 GRAB BAR - 42"
8 SANITARY-NAPKIN DISPENSER
9 SANITARY-NAPKIN DISPOSAL UNIT
10 SEAT-COVER DISPENSER
11 MIRROR UNIT

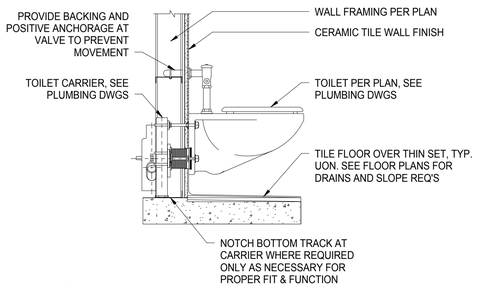

7 TOILET ANCHORAGE
1/8" = 1'-0"

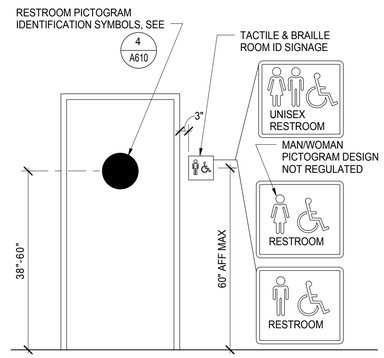

5 RESTROOM SIGNAGE
1/2" = 1'-0"

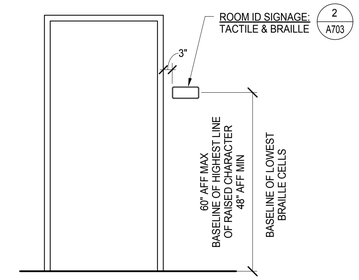

3 ROOM SIGNAGE
1/2" = 1'-0"

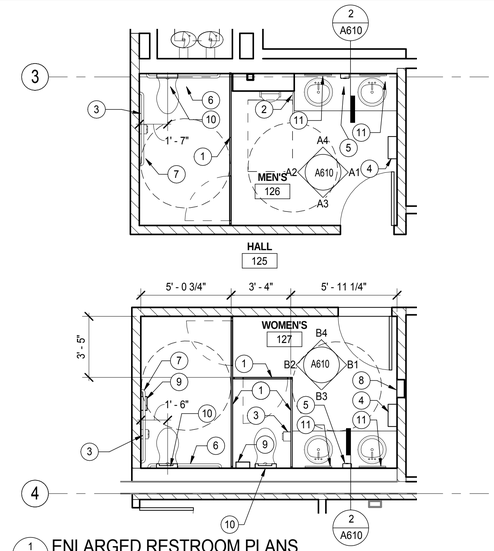

1 ENLARGED RESTROOM PLANS
1/4" = 1'-0"

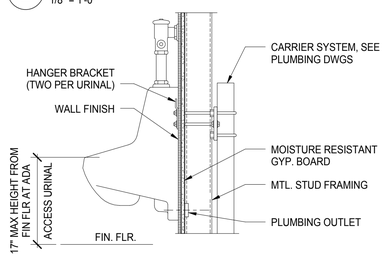

8 URINAL ANCHORAGE
1/8" = 1'-0"

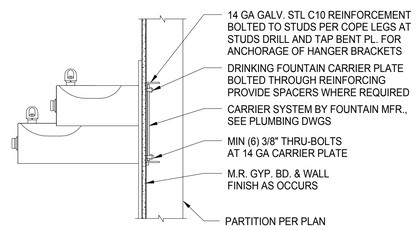

DRINKING FOUNTAIN PER PLAN

6 WATER FOUNTAIN ANCHORAGE
1/8" = 1'-0"

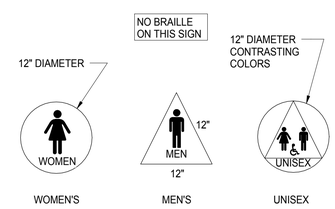

4 RESTROOM IDENTIFICATION SYMBOLS
NTS

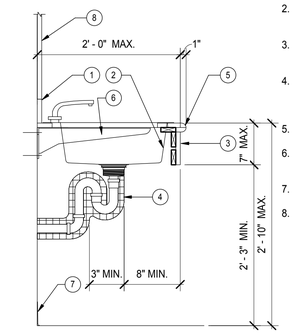

KEYNOTES

1. SOLID SURFACE COUNTER & BACK SPLASH ON PLYWOOD.
2. SELF RIMMING ADA ACCESSIBLE SINK - REFER TO PLUMBING DWGS
3. PLASTIC LAMINATE FRONT AND EDGES
4. WRAP ALL EXPOSED PIPES AND SHARP EDGES/SURFACES WITH RIGID MOLDED INSULATION
5. BULL NOSE EDGE BOTH SIDES
6. PREFINISHED METAL COUNTERTOP SUPPORT BRACKET
7. 4" RUBBER BASE
8. MIRROR

2 SECTION @ LAVATORY
1" = 1'-0"

TOILET PARTITION - HANDRAIL

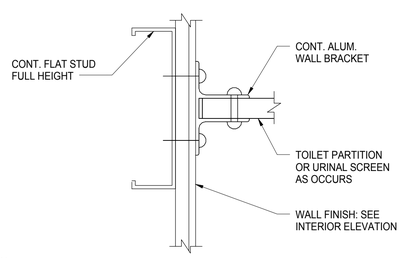

TOILET PARTITION: PANEL TO METAL-FRAMED WALL

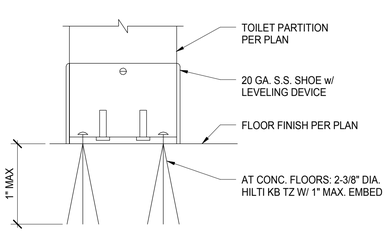

TOILET PARTITION - PILASTER SHOE

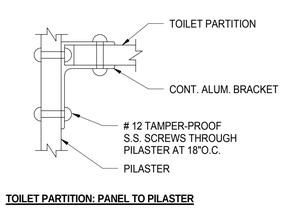

TOILET PARTITION: PANEL TO PILASTER

9 TYP TOILET PARTITION
1/4" = 1'-0"

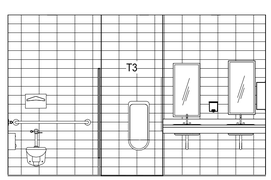

A4 MEN'S 126 - WEST
1/4" = 1'-0"

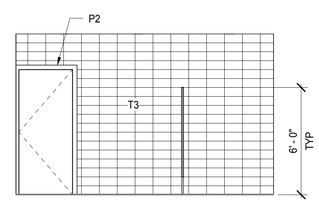

A3 MEN'S ROOM 126 - EAST
1/4" = 1'-0"

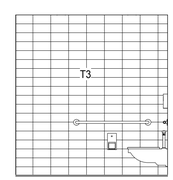

A2 MEN'S 126 - SOUTH
1/4" = 1'-0"

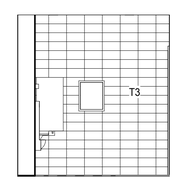

A1 MEN'S 126 - NORTH
1/4" = 1'-0"

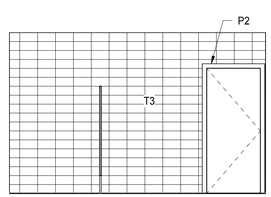

B4 WOMEN'S 127 - WEST
1/4" = 1'-0"

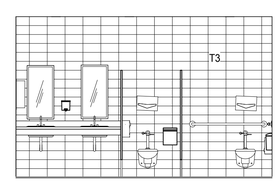

B3 WOMEN'S 127 - EAST
1/4" = 1'-0"

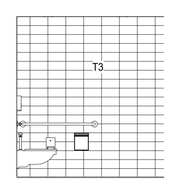

B2 WOMEN'S 127 - SOUTH
1/4" = 1'-0"

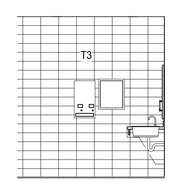

B1 WOMEN'S 127 - NORTH
1/4" = 1'-0"

KITCHELL
Capital Expenditure Managers
2750 Gateway Oaks Drive
Suite 300
Sacramento, CA. 95833
(916) 648-9700

BCAG BUTTE COUNTY ASSOCIATION OF GOVERNMENTS

BUTTE REGIONAL TRANSIT OPERATIONS CENTER
326 HUSS LANE, CHICO CA

BUTTE COUNTY ASSOCIATION OF GOVERNMENTS

PROJECT STATUS:
BID SET
BUILDINGS:

SHEET TITLE:
RESTROOM ENLARGED PLANS & ELEVATIONS

SCALE: 0 1/2 1 — BAR IS ONE INCH ON ORIGINAL DRAWING. IF NOT ONE INCH ON THIS SHEET, ADJUST SCALES ACCORDINGLY

REVISIONS

No.	Description	Date

JOB NO. 5006A3
DATE 12/3/15
SHEET A610

LAST REVISION: 11/30/2015 1:59:36 PM

C:\BIM\BCAG TI_hornberger.rvt

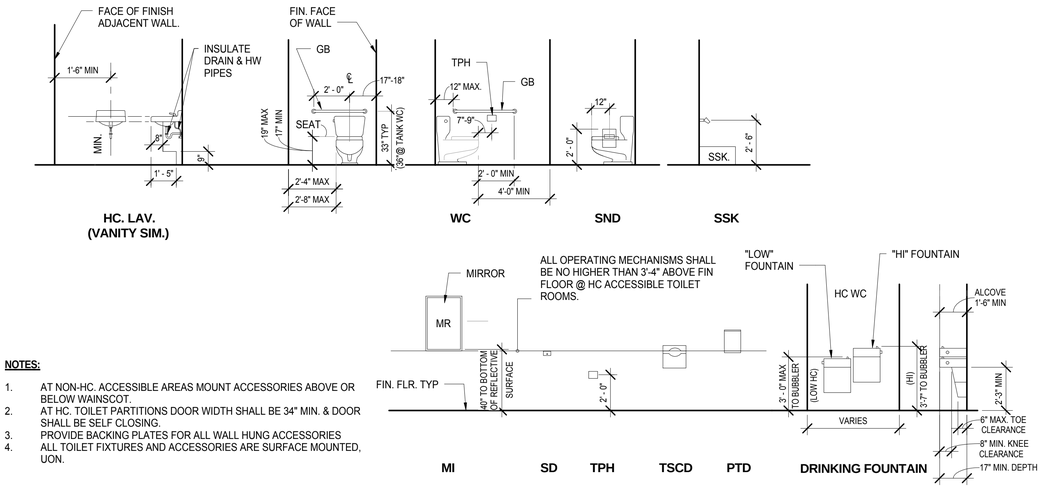

NOTES:

1. AT NON-HC. ACCESSIBLE AREAS MOUNT ACCESSORIES ABOVE OR BELOW WAINSCOT.
2. AT HC. TOILET PARTITIONS DOOR WIDTH SHALL BE 34" MIN. & DOOR SHALL BE SELF CLOSING.
3. PROVIDE BACKING PLATES FOR ALL WALL HUNG ACCESSORIES
4. ALL TOILET FIXTURES AND ACCESSORIES ARE SURFACE MOUNTED, UON.

1 / — TYPICAL FIXTURES AND ACCESSORIES
1/4" = 1'-0"

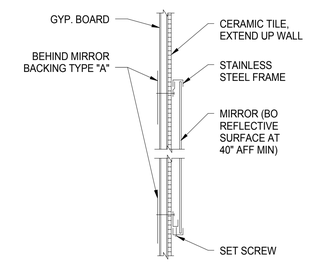

2 / — MIRROR ANCHORAGE
1/8" = 1'-0"

KITCHELL
Capital Expenditure Managers
2750 Gateway Oaks Drive
Suite 300
Sacramento, CA. 95833
(916) 648-9700

BCAG BUTTE COUNTY ASSOCIATION OF GOVERNMENTS

BUTTE REGIONAL TRANSIT OPERATIONS CENTER
326 HUSS LANE, CHICO CA

BUTTE COUNTY ASSOCIATION OF GOVERNMENTS

PROJECT STATUS:
BID SET
BUILDINGS:

SHEET TITLE:
RESTROOM DETAILS

SCALE: 0 1/2 1 — BAR IS ONE INCH ON ORIGINAL DRAWING. IF NOT ONE INCH ON THIS SHEET, ADJUST SCALES ACCORDINGLY

REVISIONS

No.	Description	Date

JOB NO. 5006A3
DATE 12/3/15
SHEET A611

LAST REVISION: 11/30/2015 1:59:37 PM

C:\BIM\BCAG TI_hornberger.rvt

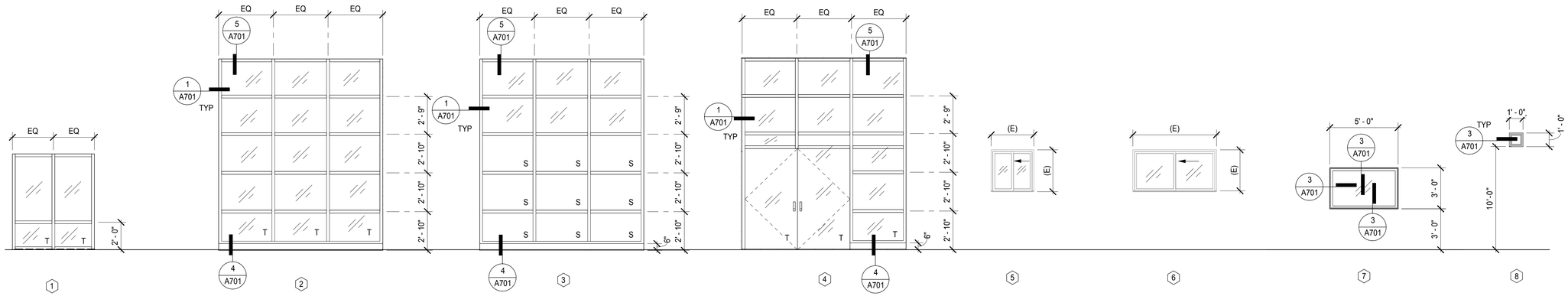

LEGEND:

T = TEMPERED GLAZING

S = SPANDREL PANEL

// = CLEAR GLAZING

1-6: GC TO FIELD VERIFY OPENING SIZE

* = STC 39 OR GREATER

GENERAL NOTES:

1. GENERAL CONTRACTOR TO FIELD VERIFY ALL OPENINGS PRIOR TO FABRICATION

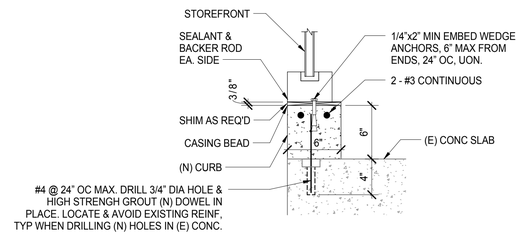

4 — STOREFRONT SILL SECTION
1 1/2" = 1'-0"

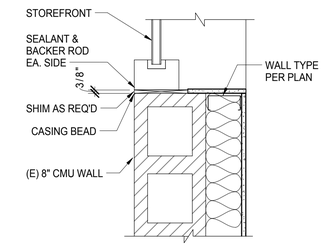

1 — JAMB DETAIL
1 1/2" = 1'-0"

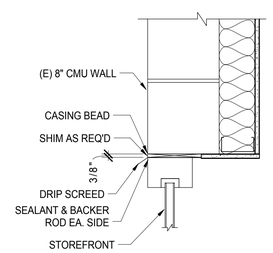

5 — STOREFRONT HEAD SECTION
1 1/2" = 1'-0"

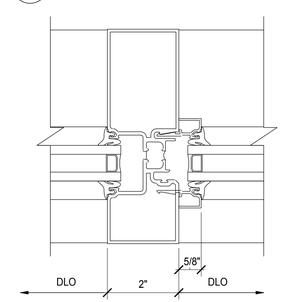

2 — STOREFRONT DETAIL
6" = 1'-0"

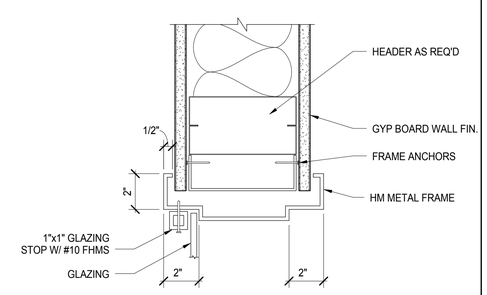

3 — INTERIOR WINDOW DETAIL
3" = 1'-0"

KITCHELL
Capital Expenditure Managers
2750 Gateway Oaks Drive
Suite 300
Sacramento, CA. 95833
(916) 648-9700

BCAG BUTTE COUNTY ASSOCIATION OF GOVERNMENTS

BUTTE REGIONAL TRANSIT OPERATIONS CENTER
326 HUSS LANE, CHICO CA

BUTTE COUNTY ASSOCIATION OF GOVERNMENTS

PROJECT STATUS:

BID SET

BUILDINGS:

SHEET TITLE:

WINDOW SCHEDULES & DETAILS

SCALE: 0 1/2 1 BAR IS ONE INCH ON ORIGINAL DRAWING. IF NOT ONE INCH ON THIS SHEET, ADJUST SCALES ACCORDINGLY

REVISIONS

No.	Description	Date

JOB NO. 5006A3

DATE 12/3/15

SHEET A701

C:\BIM\BCAG TI_hornberger.rvt

LAST REVISION: 11/30/2015 1:59:38 PM

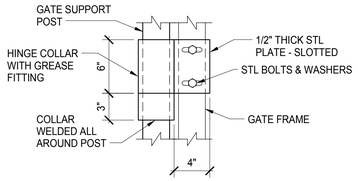

4 GATE HINGE DETAIL
1 1/2" = 1'-0"

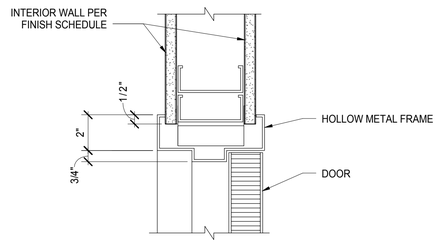

5 HEAD AT INTERIOR DOOR
3" = 1'-0"

DOOR SCHEDULE

	DOOR								FRAME				
DOOR #	WIDTH	HEIGHT	THICKNESS	MATERIAL	HOUR RATING	TYPE	GLAZING	HARDWARE	MATERIAL	JAMB	HEAD	SILL	COMMENTS
51	3' - 0"	7' - 0"	1 3/4"	WD		B		1.0	HM				
68	6' - 0"	7' - 0"	1 3/4"	HM		F	GL2	2.0	HM				
69	3' - 0"	7' - 0"	1 3/4"	HM		A	GL2	3.0	HM				
73	7' - 8"	7' - 5"		STOREFRONT		F	GL2	2.0	STOREFRONT				STOREFRONT DBL DOOR
74	8' - 8"	7' - 6"	1 3/4"	METAL		G		6.0	--				
105	3' - 0"	7' - 0"	1 3/4"	WD		E		5.0	HM				12"X12" LOUVER IN DOOR
106	3' - 0"	7' - 0"	1 3/4"	WD		C1		5.0	HM	1 / A702	5 / A702	2 / A702	
107	3' - 0"	7' - 0"	1 3/4"	WD		C1		5.0	HM	1 / A702	5 / A702	2 / A702	
108	3' - 0"	7' - 0"	1 3/4"	WD		B		5.0	HM				
109	3' - 0"	7' - 0"	1 3/4"	WD		C	GL1	5.0	HM	1 / A702	5 / A702	2 / A702	
110	3' - 0"	7' - 0"	1 3/4"	WD		C	GL1	5.0	HM	1 / A702	5 / A702	2 / A702	
114	3' - 0"	7' - 0"	1 3/4"	WD		C1		5.0	HM	1 / A702	5 / A702	2 / A702	
115	3' - 0"	7' - 0"	1 3/4"	WD		C1		5.0	HM	1 / A702	5 / A702	2 / A702	
116	3' - 0"	7' - 0"	1 3/4"	WD		C1		5.0	HM	1 / A702	5 / A702	2 / A702	
117.1	3' - 0"	7' - 0"	1 3/4"	WD		B		7.0	HM				
117.2	3' - 0"	7' - 0"	1 3/4"	WD	90	B		1.0	HM				
117.3	3' - 0"	7' - 0"	1 3/4"			A	GL2	8.0	HM				
119	3' - 0"	7' - 0"	1 3/4"	WD		C1		5.0	HM	1 / A702	5 / A702	2 / A702	
120	3' - 0"	7' - 0"	1 3/4"	WD		C1		5.0	HM	1 / A702	5 / A702	2 / A702	
121	3' - 0"	7' - 0"	1 3/4"	WD		C1		5.0	HM	1 / A702	5 / A702	2 / A702	
122	3' - 0"	7' - 0"	1 3/4"	WD		C1		5.0	HM	1 / A702	5 / A702	2 / A702	
123	3' - 0"	7' - 0"	1 3/4"	WD		C1		5.0	HM	1 / A702	5 / A702	2 / A702	
124	3' - 0"	7' - 0"	1 3/4"	WD		C1		5.0	HM	1 / A702	5 / A702	2 / A702	
125	3' - 0"	7' - 0"	1 3/4"	WD		B		1.0	HM				
126	3' - 0"	7' - 0"	1 3/4"	WD		E		9.0	HM				12"X12" LOUVER IN DOOR
127	3' - 0"	7' - 0"	1 3/4"	WD		E		9.0	HM				12"X12" LOUVER IN DOOR
128	3' - 0"	7' - 0"	1 3/4"	WD		C1		5.0	HM	1 / A702	5 / A702	2 / A702	
129	3' - 0"	7' - 0"	1 3/4"	WD	90	C1		10.0	HM				DOOR GASKET - AUTOMATIC DOOR BOTTOM
131	3' - 0"	7' - 0"	1 3/4"	WD		C1		11.0	HM	1 / A702	5 / A702	2 / A702	DOOR GASKET - AUTOMATIC DOOR BOTTOM
132	3' - 0"	7' - 0"	1 3/4"	WD		C1		11.0	HM	1 / A702	5 / A702	2 / A702	DOOR GASKET - AUTOMATIC DOOR BOTTOM
133	3' - 0"	7' - 0"	1 3/4"	WD	90	C1		11.0	HM	1 / A702	5 / A702	2 / A702	DOOR GASKET - AUTOMATIC DOOR BOTTOM
135	3' - 0"	7' - 0"	1 3/4"	WD		B		6.0	HM				
136	3' - 0"	7' - 0"	1 3/4"	HM		E		12.0	HM				12"X12" LOUVER IN DOOR
137	6' - 0"	7' - 0"	1 3/4"	HM		D		13.0	HM				STC 38

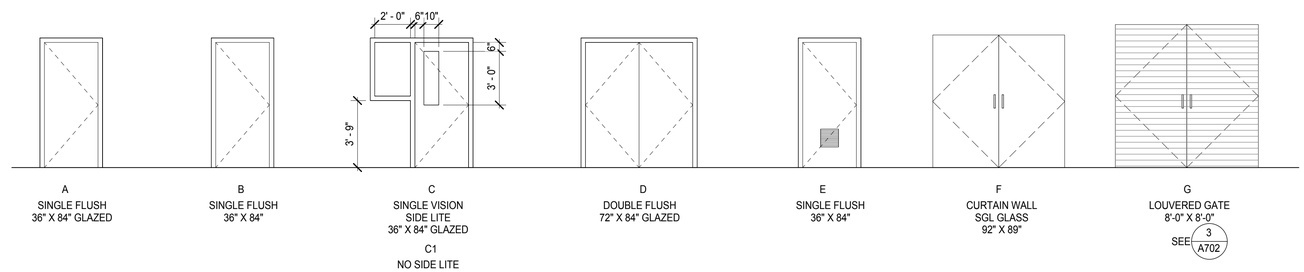

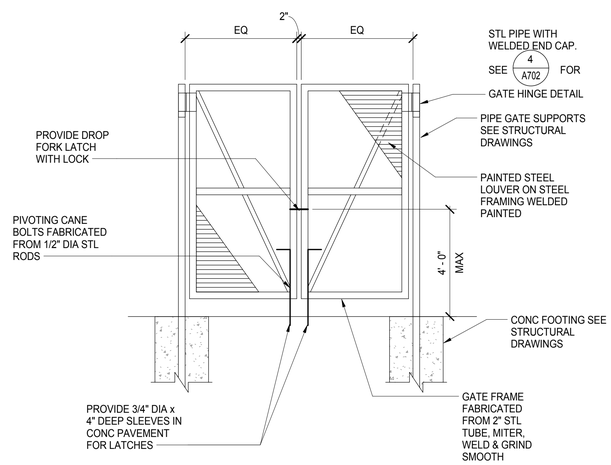

3 LOUVER GATE ELEVATION
3/8" = 1'-0"

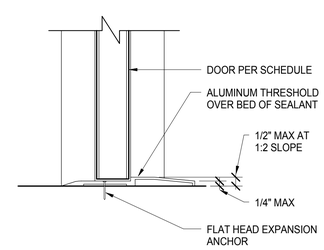

2 ACCESSIBLE THRESHOLD
3" = 1'-0"

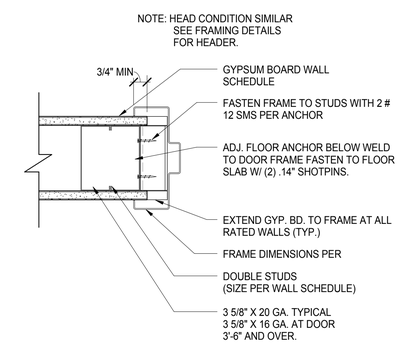

1 TYP DOOR JAMB
3" = 1'-0"

KITCHELL
Capital Expenditure Managers
2750 Gateway Oaks Drive
Suite 300
Sacramento, CA. 95833
(916) 648-9700

BCAG BUTTE COUNTY ASSOCIATION OF GOVERNMENTS

BUTTE REGIONAL TRANSIT OPERATIONS CENTER
326 HUSS LANE, CHICO CA

BUTTE COUNTY ASSOCIATION OF GOVERNMENTS

PROJECT STATUS:
BID SET

BUILDINGS:

SHEET TITLE:
DOOR SCHEDULES & DETAILS

SCALE: 0 1/2 1 BAR IS ONE INCH ON ORIGINAL DRAWING. IF NOT ONE INCH ON THIS SHEET, ADJUST SCALES ACCORDINGLY

REVISIONS

No.	Description	Date

JOB NO. 5006A3
DATE 12/3/15
SHEET A702

C:\BIM\BCAG TI_hornberger.rvt

LAST REVISION: 11/30/2015 1:59:39 PM

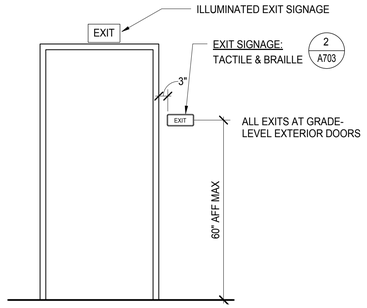

1 — EXIT SIGNAGE
1/2" = 1'-0"

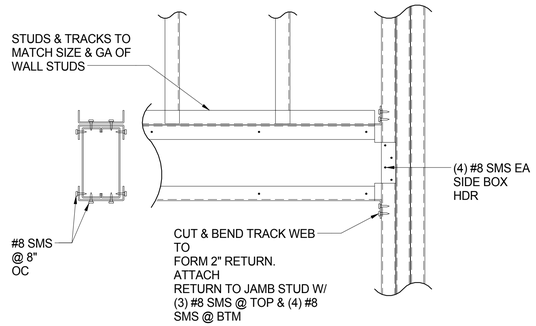

6 — HEADER FRAMING AT OPENING
1 1/2" = 1'-0"

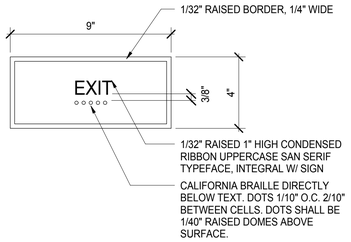

2 — INTERIOR TACTILE EXIT SIGNAGE
3" = 1'-0"

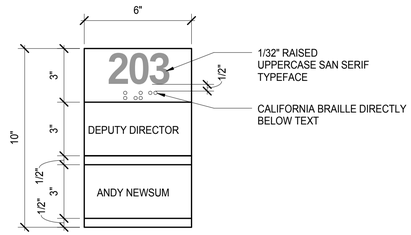

NOTE:
1. VERIFY WITH ARCHITECT PRIOR TO FABRICATION.

3 — ROOM IDENTIFICATION SIGN
3" = 1'-0"

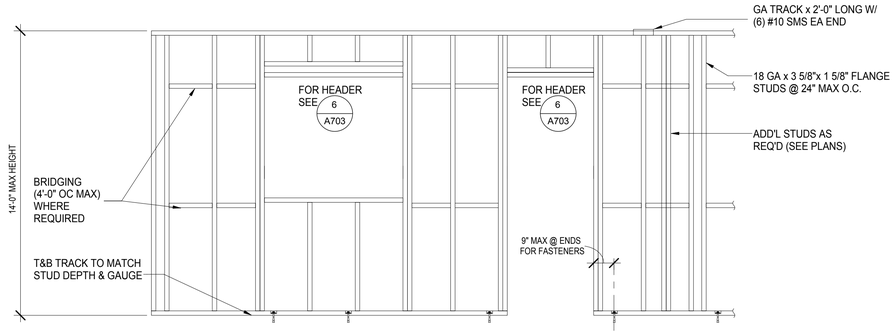

5 — TYPICAL WALL FRAMING
1/2" = 1'-0"

KITCHELL
Capital Expenditure Managers
2750 Gateway Oaks Drive
Suite 300
Sacramento, CA. 95833
(916) 648-9700

BCAG BUTTE COUNTY ASSOCIATION OF GOVERNMENTS

BUTTE REGIONAL TRANSIT OPERATIONS CENTER
326 HUSS LANE, CHICO CA

BUTTE COUNTY ASSOCIATION OF GOVERNMENTS

PROJECT STATUS:
BID SET
BUILDINGS:

SHEET TITLE:
SIGNAGE DETAILS

SCALE: 0 1/2 1 — BAR IS ONE INCH ON ORIGINAL DRAWING. IF NOT ONE INCH ON THIS SHEET, ADJUST SCALES ACCORDINGLY

REVISIONS

No.	Description	Date

JOB NO. 5006A3
DATE 12/3/15
SHEET A703

C:\BIM\BCAG TI_hornberger.rvt

LAST REVISION: 11/30/2015 1:59:40 PM

STRUCTURAL ABBREVIATIONS

SYMBOL	DESCRIPTION
@	AT
AB	ANCHOR BOLT
ABV	ABOVE
ALT	ALTERNATE
APPROX	APPROXIMATE
ARCH'L	ARCHITECTURAL
BC	BOTTOM OF CONCRETE
BLDG	BUILDING
BLKG	BLOCKING
BLW	BELOW
BM	BEAM
BOF	BOTTOM OF FOOTING
BOT	BOTTOM OF CONCRETE
BRG	BEARING
BTWN	BETWEEN
CBC	CALIFORNIA BUILDING CODE
CC	CENTER TO CENTER
CIP	CAST IN PLACE
CJ	CONSTRUCTION OR CONTROL JOINT
CJP	COMPLETE JOINT PENETRATION
CL	CENTERLINE
CLG	CEILING
CLR	CLEAR
CMU	CONCRETE MASONRY UNIT
COL	COLUMN
CONC	CONCRETE
CONT	CONTINUOUS
CONTR	CONTRACTOR
CSK	COUNTERSINK
CTR	CENTER
DBL	DOUBLE
DF	DOUGLAS FIR
DIA or ø	DIAMETER
DIAG	DIAGONAL
DIM	DIMENSION
DL	DEAD LOAD
DO	DITTO
DWG	DRAWING
(E)	EXISTING
EA	EACH
EF	EACH FACE
EJ	EXPANSION JOINT
EL	ELEVATION
ELECT	ELECTRICAL
EN	EDGE NAILING
EOS	EDGE OF SLAB
EQ	EQUAL
Eq	EARTHQUAKE
EW	EACH WAY
EWEF	EACH WAY EACH FACE
EXT	EXTERIOR
FB	FACE OF BLOCK (OR BRICK) OR FLAT BAR
FC	FACE OF CONCRETE OR FRAMING CLIP (SIMPSON A35 UNO)
FDN	FOUNDATION
FF	FINISH FLOOR
FG	FINISH GRADE
FN	FIELD NAILING
FS	FACE OF STUD OR FAR SIDE
FT(')	FOOT/FEET OR FIRE TREATED
FTG	FOOTING
GA	GAUGE OR GAGE
GLB	GLUED LAMINATED BEAM
HB	HEADED BOLT
HDG	HOT-DIPPED GALVANIZED
HDR	HEADER
HORIZ	HORIZONTAL
HSB	HIGH STRENGTH BOLT
HSS	HOLLOW STRUCTURAL STEEL
HT	HEIGHT
INTR	INTERIOR
INTRM	INTERMEDIATE
JH	JOIST HANGER
JT	JOINT
LL	LIVE LOAD
LLH	LONG LEG HORIZONTAL
LLV	LONG LEG VERTICAL
LS	LAG SCREW
LW	LIGHT WEIGHT
MAX	MAXIMUM
MB	MACHINE BOLT
MECH	MECHANICAL
MFR	MANUFACTURER
MISC	MISCELLANEOUS
MTL	METAL
(N)	NEW
NS	NEAR SIDE
NTS	NOT TO SCALE
NW	NORMAL WEIGHT
OC	ON CENTER
OD	OUTSIDE DIAMETER
OH	OPPOSITE HAND
OSB	ORIENTED STRAND BOARD
LBS or #	POUNDS
PC	PIECE
PERP	PERPENDICULAR
PJP	PARTIAL JOINT PENETRATION
PL	PLATE
PT	PRESSURE TREATED
PWPEN	PLYWOOD PANELING EDGE NAILING
R	RADIUS
REINF	REINFORCING
REQ'D	REQUIRED
SC	SLIP CRITICAL
SHTG	SHEATHING
SIM	SIMILAR
SMS	SHEET METAL SCREW
SOG	SLAB ON GRADE
SP	STRUCTURAL PLYWOOD/PANEL
SQ	SQUARE
STD	STANDARD
STFNR	STIFFENER
STG'D	STAGGERED
STL	STEEL
STRUCT	STRUCTURAL
SW	SHEARWALL
T&B	TOP AND BOTTOM
T&G	TONGUE & GROOVE
THRD	THREADED
TN	TOE NAIL
TOC	TOP OF CONCRETE
TOF	TOP OF FOOTING
TOM	TOP OF MASONRY
TOS	TOP OF STEEL
TOT	TOTAL
TOW	TOP OF WALL
TYP	TYPICAL
UNO	UNLESS NOTED OTHERWISE
VERT	VERTICAL
W/	WITH
W/O	WITHOUT
W/R	WITH RESPECT
WF	WIDE FLANGE
WP	WORK POINT
WWF	WELDED WIRE FABRIC

CONCRETE

1. STRUCTURAL CONCRETE SHALL ATTAIN 28 DAY COMPRESSIVE STRENGTH AS REQUIRED IN NOTE #24. MAXIMUM SLUMP SHALL NOT EXCEED 4 INCHES.
2. CONCRETE MIX DESIGNS SHALL BE PREPARED BY A REGISTERED CIVIL ENGINEER, REVIEWED BY OWNER'S TESTING LABORATORY AND SUBMITTED TO THE STRUCTURAL ENGINEER FOR REVIEW.
3. CEMENTITIOUS MATERIALS:
   CEMENT SHALL CONFORM TO ASTM C-150 TYPE I OR II.
   FLY ASH SHALL CONFORM TO ASTM C-618. MAX QUANTITY OF FLYASH SHALL BE AS GIVEN IN SPECS (15% MAX UNO).
4. CONCRETE AGGREGATES SHALL CONFORM TO ASTM C-33 FOR NORMAL WEIGHT CONCRETE AND ASTM C-330 FOR LIGHTWEIGHT CONCRETE.
5. NON-SHRINK GROUT OR DRYPACK SHALL CONSIST OF A PREMIXED NONMETALLIC FORMULA.
6. REINFORCING STEEL SHALL CONFORM TO ASTM A-615 GRADE 60 FOR #4 AND LARGER, AND ASTM A-615 GRADE 40 FOR #3 AND SMALLER, EXCEPT REINFORCING STEEL TO BE WELDED SHALL CONFORM TO ASTM A-706. CONTRACTOR SHALL SUBMIT REBAR MILL CERTIFICATES.
7. ALL PREHEATING AND WELDING OF REINFORCING BARS SHALL BE DONE IN ACCORDANCE WITH AWS D1.4 LATEST EDITION AND SHALL BE CONTINUOUSLY INSPECTED BY A QUALIFIED LABORATORY. CONTRACTOR SHALL FURNISH WPS FOR ALL REBAR WELDING TO THE LABORATORY.
8. REINFORCING STEEL SHALL BE FABRICATED ACCORDING TO "MANUAL OF STANDARD PRACTICE FOR REINFORCED CONCRETE CONSTRUCTION".
9. DIMENSIONS SHOWN FOR LOCATION OF REINFORCING ARE TO THE FACE OF BARS LISTED AND DENOTE CLEAR COVERAGE. NON-PRESTRESSED, CAST-IN-PLACE CONCRETE COVERAGE SHALL BE AS FOLLOWS, UNO:
   CONCRETE DEPOSITED DIRECTLY AGAINST GROUND (EXCEPT SLABS) --- 3"
   CONCRETE EXPOSED TO GROUND OR WEATHER BUT PLACED IN FORMS:
   #5 AND SMALLER ---------- 1-1/2"
   #6 AND LARGER ---------- 2"
   SLABS (ON FORMS) ---------- 3/4"
   SLABS (ON GROUND) ---------- 2" CLEAR FROM TOP UNO
10. SPLICES IN CONTINUOUS REINFORCEMENT SHALL BE LAPPED UNO, SEE SCHEDULE THIS SHEET. SPLICES IN ADJACENT BARS SHALL BE GREATER THAN 5'-0" APART. SPLICE CONTINUOUS BARS IN SOIL-BEARING GRADE BEAMS, STRUCTURAL SLABS ON GRADE AND MAT FOUNDATIONS AS FOLLOWS UNO: TOP BARS AT CENTERLINE OF SUPPORT; BOTTOM BARS AT MID-SPAN. SPLICE CONTINUOUS BARS IN ELEVATED SLABS AND BEAMS, ETC. AS FOLLOWS UNO: TOP BARS AT MID-SPAN; BOTTOM BARS AT CENTERLINE OF SUPPORT.
11. THE MINIMUM CLEAR SPACING BETWEEN PARALLEL BARS IN A LAYER SHALL NOT BE LESS THAN THE LARGER OF BAR DIAMETER, 1", OR 33% GREATER THAN THE MAXIMUM AGGREGATE SIZE (NOMINAL), WHICHEVER IS GREATEST. THIS REQUIREMENT ALSO APPLIES TO THE CLEAR SPACING BETWEEN DIFFERENT LAYERS OF PARALLEL BARS AND TO THE CLEAR DISTANCE BETWEEN A CONTACT LAP SPLICE AND ADJACENT SPLICES OR BARS.
12. ALL HOOKS SHALL BE STANDARD HOOKS UNLESS OTHERWISE SHOWN OR NOTED. AT WALLS, PROVIDE HOOKS AT ENDS OF ALL REINFORCING AT ENDS, CORNERS AND INTERSECTIONS, UNO.
13. CONSTRUCTION JOINTS SHALL BE MADE ROUGH AND ALL LAITANCE REMOVED FROM THE SURFACE. CONCRETE MAY BE ROUGHENED BY CHIPPING THE ENTIRE SURFACE, SAND BLASTING, OR RAKING THE SURFACE TO PROVIDE 1/4" DEEP DEFORMATIONS.
14. REMOVE ALL DEBRIS FORM FORMS BEFORE CASTING ANY CONCRETE.
15. REINFORCING, DOWELS, BOLTS, ANCHORS, SLEEVES, ETC. TO BE EMBEDDED IN CONCRETE SHALL BE SECURELY POSITIONED BEFORE PLACING CONCRETE.
16. ANCHOR BOLTS (AB's) CAST IN CONCRETE OR MASONRY FOR WALL SILL AND LEDGER/APPLICATIONS SHALL BE HEADED BOLTS WITH CUT THREADS CONFORMING TO ASTM A307, UNO. REFER TO "WOOD" NOTES FOR ADDITIONAL REQUIREMENTS FOR BOLTS IN CONTACT WITH PRESSURE TREATED OR FIRE RETARDANT MATERIAL. REFER TO "STRUCTURAL STEEL" NOTE FOR REQUIREMENTS FOR ANCHOR RODS (AR's) CAST IN CONCRETE FOR COLUMN BASE PLATE AND STEEL EMBED APPLICATIONS.
17. DOWEL ALL VERTICAL REINFORCING IN WALLS AND COLUMNS FROM FOUNDATION WITH SAME SIZE BAR.
18. CONSOLIDATE CONCRETE PLACED IN FORMS BY MECHANICAL VIBRATING EQUIPMENT SUPPLEMENTED BY HAND-SPADING, RODDING OR TAMPING. USE EQUIPMENT AND PROCEDURES FOR CONSOLIDATION OF CONCRETE IN ACCORDANCE WITH THE RECOMMENDED PRACTICES OF ACI 309 TO SUIT THE TYPE OF CONCRETE AND PROJECT CONDITIONS. CONCRETE SHALL NOT BE DROPPED THROUGH REINFORCING STEEL (AS IN WALLS) SO AS TO CAUSE SEGREGATION OF AGGREGATES. IN SUCH CASES HOPPERS AND CHUTES OR TRUNKS OF VARIABLE LENGTHS SHALL BE USED SO THAT THE FREE UNCONFINED FALL OF CONCRETE SHALL NOT EXCEED 6 FEET.
19. DRILL THROUGH STEEL COLUMNS, BEAMS AND PLATES TO PASS CONTINUOUS REINFORCING.
20. NO WOOD SPREADERS ALLOWED. NO WOOD STAKES ALLOWED IN AREAS TO BE CONCRETED.
21. PROVIDE #5 X 4'-0" DIAGONAL REINFORCING AT TOP AND BOTTOM OF SLAB AT ALL RE-ENTRANT CORNERS TYPICAL. THIS APPLIES TO SLAB ON GRADE.
22. ALL SAW CUTTING SHALL BE DONE AFTER INITIAL SET HAS OCCURRED TO AVOID TEARING OR DAMAGE BY THE SAW BLADE, BUT BEFORE INITIAL SHRINKAGE HAS OCCURRED.
23. NOTIFY STRUCTURAL ENGINEER A MINIMUM OF 48 HOURS BEFORE PLACING ANY CONCRETE.
24. CONCRETE STRENGTHS & MIX PROPERTIES UNO: MAX AGGR.

ITEM	f'c AT 28 DAYS	SIZE	WEIGHT	MAX W/CM* RATIO
SLAB ON GRADE	3000 PSI	1"	NW	0.45
FOUNDATIONS	3000 PSI	1"	NW	0.58

* W/CM = WATER: CEMENTITIOUS MATERIAL RATIO

GENERAL STRUCTURAL NOTES

1. INTERPRETATION OF DRAWINGS & SPECIFICATIONS
   A. FOR CONVENIENCE, SPECIFICATIONS HAVE BEEN PREPARED FOR THIS PROJECT AND ARE ARRANGED IN SEVERAL SECTIONS, BUT SUCH SEPARATION SHALL NOT BE CONSIDERED AS THE LIMITS OF THE WORK REQUIRED OF ANY SEPARATE TRADE. THE TERMS AND CONDITIONS OF SUCH LIMITATIONS ARE WHOLLY BETWEEN THE CONTRACTOR AND HIS SUBCONTRACTORS.
   B. IN GENERAL, THE WORKING DETAILS WILL INDICATE DIMENSIONS, POSITION AND KIND OF CONSTRUCTION, AND THE SPECIFICATIONS, QUALITIES AND METHODS. ANY WORK INDICATED ON THE WORKING DETAILS AND NOT MENTIONED IN THE SPECIFICATIONS, OR VICE VERSA, SHALL BE FURNISHED AS THOUGH FULLY SET FORTH IN BOTH. WORK NOT PARTICULARLY DETAILED, MARKED OR SPECIFIED, SHALL BE THE SAME AS SIMILAR PARTS THAT ARE DETAILED, MARKED OR SPECIFIED. IF CONFLICTS OCCUR ON DRAWINGS AND/OR SPECIFICATIONS, THE MOST EXPENSIVE MATERIALS OR METHODS WILL PREVAIL.
   C. SHOULD AN ERROR APPEAR IN THE WORKING DETAILS OR SPECIFICATIONS OR IN WORK DONE BY OTHERS AFFECTING THIS WORK, THE CONTRACTOR SHALL NOTIFY THE OWNER AT ONCE AND IN WRITING. IF THE CONTRACTOR PROCEEDS WITH THE WORK SO AFFECTED WITHOUT HAVING GIVEN SUCH WRITTEN NOTICE AND WITHOUT RECEIVING THE NECESSARY APPROVAL, DECISION OR INSTRUCTIONS IN WRITING FROM THE OWNER, THEN HE SHALL HAVE NO VALID CLAIM AGAINST THE OWNER, FOR THE COST OF SO PROCEEDING AND SHALL MAKE GOOD ANY RESULTING DAMAGE OR DEFECT. NO VERBAL APPROVAL, DECISION, OR INSTRUCTION SHALL BE VALID OR BE THE BASIS FOR ANY CLAIM AGAINST THE OWNER, ITS OFFICERS, EMPLOYEES OR AGENTS. THE FOREGOING INCLUDES TYPICAL ERRORS IN THE SPECIFICATIONS OR NOTATIONAL ERRORS IN THE WORKING DETAILS WHERE THE INTERPRETATION IS DOUBTFUL OR WHERE THE ERROR IS SUFFICIENTLY APPARENT AS TO PLACE A REASONABLY PRUDENT CONTRACTOR ON NOTICE THAT, SHOULD HE ELECT TO PROCEED, HE IS DOING SO AT HIS OWN RISK.
2. CONSTRUCTION SHALL CONFORM TO ALL APPLICABLE CODES AND REGULATIONS.
3. SHOP DRAWING NOTE:
   A. SHOP DRAWINGS SHALL BE SUBMITTED IN ELECTRONIC PDF FORMAT.
   B. THE PURPOSE OF SHOP DRAWINGS SUBMITTALS BY THE CONTRACTOR IS TO DEMONSTRATE TO THE ENGINEER THAT HE UNDERSTANDS THE DESIGN CONCEPT BY INDICATING WHICH MATERIAL HE INTENDS TO FURNISH AND INSTALL, AND BY DETAILING THE FABRICATION AND INSTALLATION METHODS HE INTENDS TO USE ON A STAND ALONE SET OF DOCUMENTS. DUPLICATION OF DESIGN DOCUMENTS FOR THE PURPOSE OF SHOP DRAWINGS IS NOT ACCEPTABLE.
   C. PRIOR TO FABRICATION, SHOP DRAWINGS SHALL BE SUBMITTED FOR REVIEW BY THE STRUCTURAL ENGINEER, SHOP DRAWING SUBMITTALS SHALL INCLUDE, BUT ARE NOT NECESSARILY LIMITED TO, STRUCTURAL STEEL & REINFORCING STEEL.
   D. PRIOR TO SUBMISSION THE CONTRACTOR SHALL REVIEW ALL SUBMITTALS FOR CONFORMANCE WITH THE CONTRACT DOCUMENTS AND SHALL STAMP SUBMITTALS AS BEING "REVIEWED FOR CONFORMANCE".
   E. SHOP DRAWINGS SUBMITTALS PROCESSED BY THE ENGINEER ARE NOT CHANGE ORDERS.
   F. ANY DETAIL ON THE SHOP DRAWING THAT DEVIATES FROM THE CONTRACT DOCUMENTS SHALL CLEARLY BE MARKED WITH THE NOTE "THIS A CHANGE".
   G. SHOP DRAWINGS OR CALCULATIONS SUBMITTED FOR REVIEW THAT REQUIRE RESUBMITTAL FOR RE-REVIEW WILL NOT PROCEED WITHOUT WRITTEN APPROVAL FROM THE GENERAL CONTRACTOR FOR ADDITIONAL ENGINEERING REVIEW SERVICES.
4. SAFETY NOTE:
   A. IT IS THE CONTRACTORS RESPONSIBILITY TO COMPLY WITH THE PERTINENT SECTIONS, AS THEY APPLY TO THIS PROJECT, OF THE "CONSTRUCTION SAFETY ORDERS" ISSUED BY THE STATE OF CALIFORNIA LATEST EDITION, AND ALL OSHA REQUIREMENTS.
   B. THE OWNER AND THE ENGINEER DO NOT ACCEPT ANY RESPONSIBILITY FOR THE CONTRACTOR'S FAILURE TO COMPLY WITH THESE REQUIREMENTS.
   C. THE CONTRACTOR SHALL BE RESPONSIBLE FOR ADEQUATE DESIGN AND CONSTRUCTION OF ALL FORMS AND SHORING REQUIRED.
5. THE CONTRACTOR SHALL NOTIFY THE ENGINEER WHERE A CONFLICT OR DISCREPANCY OCCURS BETWEEN THE STRUCTURAL DRAWINGS AND ANY OTHER PORTION OF THE CONTRACT DOCUMENTS OR EXISTING FIELD CONDITIONS. SUCH NOTIFICATION SHALL BE GIVEN IN DUE TIME SO AS NOT TO AFFECT THE CONSTRUCTION SCHEDULE. IN A CASE OF CONFLICT BETWEEN THE STRUCTURAL DRAWINGS AND SPECIFICATIONS THE MORE RESTRICTIVE CONDITION SHALL TAKE PRECEDENCE UNLESS WRITTEN APPROVAL HAS BEEN GIVEN FOR THE LEAST RESTRICTIVE. CONTRACTOR SHALL VERIFY ALL DIMENSIONS PRIOR TO COMMENCING ANY WORK.
6. WHERE NO SPECIFIC DETAIL IS SHOWN, THE CONSTRUCTION SHALL BE IDENTICAL OR SIMILAR TO THAT INDICATED FOR LIKE CASES OF CONSTRUCTION ON THIS PROJECT. SHOULD THERE BE ANY QUESTION, CONTACT THE ENGINEER PRIOR TO PROCEEDING.
7. WHEN CONSTRUCTION ATTACHES TO AN EXISTING BUILDING, A COMPLETE SET OF DRAWINGS OF THE EXISTING BUILDING SHALL BE KEPT ON THE JOB SITE. CONTRACTOR TO OBTAIN THE THESE DRAWINGS FROM THE OWNER.
8. ANY SUBSTITUTIONS FOR STRUCTURAL MEMBERS, HARDWARE OR DETAILS SHALL BE REVIEWED BY THE ENGINEER. SUCH REVIEW WILL BE BILLED ON A TIME AND MATERIALS BASIS TO THE GENERAL CONTRACTOR WITH NO GUARANTEE THAT THE SUBSTITUTION WILL BE ALLOWED.
9. DO NOT SCALE DRAWINGS. CONTACT THE ENGINEER FOR ANY DIMENSIONS NOT SHOWN.
10. THESE DRAWINGS ARE NOT COMPLETE UNTIL REVIEWED AND ACCEPTED BY LOCAL BUILDING OFFICIALS AND SIGNED BY THE OWNER AND THE ENGINEER.

STRUCTURAL SYMBOLS

DESCRIPTION	SYMBOL
MATCH LINE	1 / S101A — 1 / S101B; VIEW NUMBER / SHEET NUMBER; SHADED PORTION IS SIDE CONSIDERED
WORK POINT, CONTROL POINT, ELEVATION, OR DATUM POINT	
GRID LINES	0.0 / 0.0
STRUCTURAL ELEVATION	X / XXXX; ELEVATION IDENTIFIER; SHEET NUMBER
STRUCTURAL SECTION	X / XXXX; SECTION IDENTIFIER; SHEET NUMBER
STRUCTURAL DETAIL	1 / XXXX; DETAIL IDENTIFIER; SHEET NUMBER
HARDWARE CONNECTION MODEL NUMBER	X123

STRUCTURAL MATERIALS

SYMBOL	DESCRIPTION
	EARTH
	ROCK FILL
	SAND / MORTAR / PLASTER / GROUT
	CAST IN PLACE OR PRECAST CONCRETE
	STEEL
	CMU WALL
	WOOD FRAMING THRU MEMBER
	WOOD FRAMING INTERRUPTED MEMBER
	PLYWOOD

DESIGN CRITERIA

1. CODES AND STANDARDS
   2013 CALIFORNIA BUILDING CODE (CBC)
   ASCE 7-10
   ACI 318-11
   2013 NDS
   AISC 360-10, 341-10, 358-10
2. VERTICAL LOADS
   ROOF LIVE LOAD = 20 PSF
   FLOOR LIVE LOAD = 100 PSF
   FLOOR PARTITION LIVE LOAD = N/A
   CORRIDORS = N/A
   LIVE LOADS ARE REDUCED WHERE PERMITTED BY CODE.
3. SOIL VALUES
   ALLOWABLE SOILS PRESSURE
   1. DL N/A PSF
   2. DL + LL 1500 PSF
   3. DL + LL + Eq / WD 1500 PSF
   FOOTING
   MINIMUM DEPTH = 12" BELOW LOWEST ADJACENT GRADE
   MINIMUM WIDTH = 12"
4. LATERAL LOADS
   SEISMIC:
   SITE CLASS D
   S_s = 0.615 C_s = N/A
   S_1 = 0.273 S_{ds} = 0.536
   R = 2, I = 1.0, Ip = 1.0 S_{d1} = 0.337
   Ω_o = 2.5, Cd = 1.75, CMU SW
   2.0, PLYWOOD SW
   RISK CATEGORY: II
   SEISMIC DESIGN CATEGORY: D
   SEISMIC BASE SHEAR = N/A KIPS (NS DIR)
   N/A KIPS (EW DIR)
   SEISMIC FORCE RESISTING SYSTEM:
   BRG WALL - PLYWOOD SW/CMU SW
   ANALYSIS PROCEDURE: EQUAL LAT'L FORCE
   WIND:
   BASIC WIND SPEED = 110 MPH
   NOMINAL DESIGN WIND SPEED = 85 MPH
   EXPOSURE CATEGORY = C
   GC_{pi} = ±0.18

STATEMENT OF STRUCTURAL SPECIAL INSPECTIONS AND TESTING

1. SPECIAL INSPECTIONS AND TESTING SHALL BE PROVIDED BY AN INSPECTION AGENCY, EMPLOYED BY THE OWNER, AND QUALIFIED BY THE BUILDING OFFICIAL TO INSPECT THE PARTICULAR TYPE OF CONSTRUCTION. TESTS AND INSPECTIONS, AS REQUIRED BY CHAPTER 17 OF THE 2013 CBC, SHALL BE PERFORMED DURING CONSTRUCTION ON THE TYPES OF WORK LISTED BELOW:

   INSPECTIONS & TESTING:

   ■ STEEL CONSTRUCTION ——— SECTION 1705.2 & AISC 360
   ■ CONCRETE CONSTRUCTION ——— SECTION 1705.3 & TABLE 1705.3
   ■ MASONRY CONSTRUCTION - LEVEL 1 — SECTION 1705.4 & TMS 402/ACI 530/ ASCE5 & TMS602/ACI530.1/ASCE.6
   ☐ WOOD CONSTRUCTION ——— SECTION 1705.5
   ☐ HIGH-LOAD DIAPHRAGM ——— SECTION 1705.5.1
   ■ SOILS ——— SECTION 1705.6
   ☐ PILE FOUNDATIONS ——— SECTION 1705.7
   ☐ PIER FOUNDATIONS ——— SECTION 1705.8
2. INSPECTIONS MAY BE CONTINUOUS OR PERIODIC AS ALLOWED BY THE INDIVIDUAL MATERIAL OR COMPONENT INSPECTION SECTIONS AND TABLES OF SECTION 1705.
3. THE SPECIAL INSPECTOR SHALL SUBMIT INSPECTION REPORTS TO THE BUILDING OFFICIAL AND THE DESIGN PROFESSIONAL IN RESPONSIBLE CHARGE. THE REPORTS SHALL INDICATE WHETHER WORK INSPECTED CONFORMED TO THE CONSTRUCTION DOCUMENTS. ANY DISCREPANCIES SHALL BE IMMEDIATELY BROUGHT TO THE ATTENTION OF THE CONTRACTOR FOR CORRECTION. IF DISCREPANCIES ARE NOT CORRECTED, THEY SHALL BE BROUGHT TO THE ATTENTION OF THE BUILDING OFFICIAL AND DESIGN PROFESSIONAL IN RESPONSIBLE CHARGE.
4. ALL SPECIAL INSPECTION AGENCIES/INDIVIDUALS AND SHOP FABRICATORS SHALL BE APPROVED BY THE BUILDING OFFICIAL PRIOR TO COMMENCEMENT OF WORK.
5. TESTING AND INSPECTION RECORDS SHALL BE RETAINED UNTIL COMPLETION OF CONSTRUCTION.
6. THE CONTRACTOR SHALL SUBMIT A WRITTEN STATEMENT TO THE BUILDING OFFICIAL ACKNOWLEDGING RESPONSIBILITY FOR CONSTRUCTION OF THE MAIN LATERAL-FORCE RESISTING SYSTEM PRIOR TO COMMENCEMENT OF THAT WORK AS REQUIRED BY SECTION 1704 OF THE 2013 CBC.
7. FOR TESTING AND INSPECTION REQUIREMENTS FOR NON-STRUCTURAL MATERIALS AND COMPONENTS, SEE CONSTRUCTION DOCUMENTS AND COMPLY WITH CHAPTER 17 OF THE 2013 CBC.

KITCHELL
Capital Expenditure Managers
2750 Gateway Oaks Drive
Suite 300
Sacramento, CA. 95833
(916) 648-9700

BCAG BUTTE COUNTY ASSOCIATION OF GOVERNMENTS

BUTTE REGIONAL TRANSIT OPERATIONS CENTER
326 HUSS LANE, CHICO CA

BUTTE COUNTY ASSOCIATION OF GOVERNMENTS

PROJECT STATUS:
BID SET
BUILDINGS:

SHEET TITLE:
STRUCTURAL ABBREVATIONS, SYMBOLS, & NOTES

SCALE: 0 1/2 1 BAR IS ONE INCH ON ORIGINAL DRAWING. IF NOT ONE INCH ON THIS SHEET, ADJUST SCALES ACCORDINGLY

REVISIONS

No.	Description	Date

JOB NO. 5006A3
DATE 12/3/15
SHEET S001

LAST REVISION: 11/30/2015 2:00:30 PM

C:\BIM\BCAG TI_hornberger.rvt

STRUCTURAL STEEL

1. FABRICATION, ERECTION AND MATERIALS SHALL CONFORM WITH THE AISC SPECIFICATION FOR STRUCTURAL STEEL BUILDINGS, THE AISC SEISMIC PROVISIONS FOR STRUCTURAL STEEL BUILDINGS, AND THE CALIFORNIA BUILDING CODE, LATEST EDITIONS.
2. STRUCTURAL STEEL WIDE FLANGE SHAPES SHALL CONFORM WITH ASTM A992. ALL OTHER STRUCTURAL STEEL ROLLED SHAPES (CHANNELS, ANGLES, ETC) AND PLATES SHALL CONFORM WITH ASTM A36, UNO.
3. STEEL PIPE SHALL CONFORM TO ASTM A53, TYPES E OR S, GRADE B.
4. ALL HOLLOW STRUCTURAL SECTIONS (HSS) SHALL CONFORM TO ASTM A500, GRADE B.
5. ALL STRUCTURAL STEEL SHALL BE ERECTED PLUMB AND TRUE TO LINE. TEMPORARY BRACING SHALL BE INSTALLED AND SHALL BE LEFT IN PLACE UNTIL OTHER MEANS ARE PROVIDED TO ADEQUATELY BRACE THE STRUCTURE. CONTRACTOR RESPONSIBLE FOR REVIEWING ALL BASE PLATE AND SUPPORT CONDITIONS DURING ERECTION AND BRACING AS REQUIRED. SEE AISC AND OSHA REQUIREMENTS.
6. PLACE NON-SHRINK GROUT UNDER ALL BASE PLATES BEFORE ADDING VERTICAL LOAD.
7. STRUCTURAL STEEL BELOW GRADE SHALL HAVE 3 INCHES MINIMUM OF CONCRETE COVER.
8. BOLTED CONNECTIONS SHALL CONSIST OF UNFINISHED BOLTS CONFORMING TO ASTM A307 UNLESS NOTED OTHERWISE. WHERE HIGH STRENGTH BOLTS ARE INDICATED, BOLTS CONFORMING TO ASTM A325 OR ASTM A490 AS NEEDED SHALL BE PROVIDED.
9. HOLES FOR UNFINISHED BOLTS SHALL BE OF THE SAME NOMINAL DIAMETER OF THE BOLT PLUS 1/16". USE STANDARD AISC GAGE AND PITCH FOR BOLTS EXCEPT AS NOTED OTHERWISE.
10. WELDING SHALL BE DONE BY THE ELECTRIC ARC PROCESS IN ACCORDANCE WITH AMERICAN WELDING SOCIETY STANDARDS, USING ONLY CERTIFIED WELDERS. ALL GROOVE WELDS SHALL HAVE COMPLETE PENETRATION UNLESS NOTED OTHERWISE. ALL EXPOSED WELDS SHALL BE GROUND SMOOTH. ALL ELECTRODES FOR WELDING SHALL COMPLY WITH AWS CODE, E70 SERIES MINIMUM.
11. WELD LENGTHS CALLED FOR ON PLANS ARE THE NET EFFECTIVE LENGTHS REQUIRED.
12. MINIMUM FILLET WELDS:
    3/16" @ T < 1/2"
    1/4" @ T < 3/4"
    5/16" @ T > 3/4"
13. WELDING PROCEDURE SPECIFICATIONS (WPS) FOR SHOP AND FIELD PREQUALIFIED WELD JOINTS AND WELD JOINTS QUALIFIED BY TEST SHALL BE PREPARED FOR REVIEW PRIOR TO FABRICATION. ALL WELDING PROCEDURE ITEMS SUCH AS BASE METALS, WELDING PROCESSES, FILLER METALS AND JOINT DETAILS THAT MEET THE REQUIREMENTS OF AWS D1.1 SECTION 5.1 SHALL BE CONSIDERED AS PREQUALIFIED. ANY CHANGE OR SUBSTITUTION THAT IS BEYOND THE RANGE OR TOLERANCE OR REQUIREMENTS FOR PREQUALIFICATION SHALL BE QUALIFIED BY TEST PER AWS D1.1 SECTION 5 PART B. QUALIFICATION TESTING IS REQUIRED WHEN THE DEPTH OF A PARTIAL PENETRATION OR COMPLETE PENETRATION WELD IS 2" OR GREATER.
14. ALL EXPOSED STEEL SHALL RECEIVE MINIMUM ONE COAT OF PRIMER AND PAINT OR SHALL BE HOT-DIPPED GALVANIZED. DO NOT PAINT AREAS TO BE EMBEDDED INTO CONCRETE, CONTACT AREAS OF HIGH STRENGTH BOLTED CONNECTIONS AND SURFACE TO RECEIVE FIELD WELD OR SPRAY APPLIED FIREPROOFING. TOUCH-UP FIELD WELDS AND OTHER EXPOSED SURFACES AFTER ERECTION.

FOUNDATIONS

1. FOUNDATION SOIL STRATA IS UNDISTURBED, NON-ORGANIC NATIVE SOIL, CLASS 1 THRU 5, AS PER CBC CHAPTER 18 ESPECIALLY SECTIONS 1806 AND 1807, AND TABLE NO. 1806.2. FOUNDATIONS SHALL BEAR ON FIRM FOUNDATION SOIL STRATA AS APPROVED BY THE BUILDING OFFICIAL. EXPANSIVE, ORGANIC, LOOSE OR SOFT SOILS, MUD, OR NON-ENGINEERED FILL SHALL NOT BE UTILIZED FOR SUPPORT OF FOOTINGS OR SLABS ON GRADE. IT IS THE OWNER'S RESPONSIBILITY TO CONTRACT WITH A GEOTECHNICAL ENGINEER TO INSURE COMPLIANCE WITH THESE REQUIREMENTS.
2. ALL FOOTINGS SHALL BE REINFORCED CONCRETE.
3. THE ELEVATIONS OF BOTTOMS OF FOUNDATIONS AS SHOWN ON THESE DRAWINGS INDICATE THE ESTIMATED MINIMUM FOUNDATION DEPTHS.
4. FOUNDATIONS ARE DESIGNED FOR A MAXIMUM DEAD PLUS LIVE LOAD ALLOWABLE SOIL BEARING PRESSURE OF 1500 PSF.
5. BOTTOMS OF FOOTINGS SHALL EXTEND A MINIMUM OF 1'- 0" BELOW LOWEST ADJACENT GRADE.
6. THE BOTTOM OF ALL FOOTINGS SHALL BE LEVEL.
7. CENTER FOOTINGS UNDER WALLS OR COLUMNS UNLESS OTHERWISE INDICATED ON THESE DRAWINGS.
8. PROVIDE BASE MATERIALS BELOW CONCRETE FLOOR SLABS ON GRADE.
9. PROVIDE SPECIAL INSPECTIONS REQUIRED BY CBC SECTION 1705 FOR SOILS. SEE CBC SECTION 1705.6 (SOILS).

MINIMUM NAILING SCHEDULE

(HEAVIER NAILING SHOWN OR NOTED ON DRAWINGS SHALL GOVERN)

CONNECTION	COMMON WIRE NAILS
JOISTS OR RAFTERS TO SIDES OF STUDS:	
EIGHT (8) INCH JOISTS OR LESS	3-16d
FOR EACH ADDITIONAL FOUR (4) INCHES IN DEPTH OF JOIST	1-16d
JOISTS OR RAFTERS AT ALL BEARINGS:	
TOE NAILS, EACH SIDE	2-10d
CEILING JOISTS, LAPS OVER PARTITIONS, FACE NAIL	3-16d
CEILING JOISTS TO PARALLEL RAFTERS, FACE NAIL	3-16d
BLOCKING BETWEEN JOISTS OR RAFTERS:	
TO JOIST OR RAFTER-TOE NAILS, EACH SIDE, EACH END	2-10d
TO JOIST OR RAFTER BEARINGS-TOE NAILS, EACH SIDE	2-10d
BLOCKING BETWEEN STUDS, EACH END	2-10d TN
SOLE PLATE TO JOIST OR BLOCKING, FACE NAIL	16d AT 16" OC
DOUBLED STUDS, FACE NAIL	16d AT 12" OC
BUILT UP CORNER STUDS	16d AT 12" OC
RIBBONS TO STUDS:	
TWO (2) INCH RIBBONS AND SMALLER	2-16d
CONTINUOUS HEADER TO STUD, TOE NAIL	4-8d
1" BRACE TO EACH STUD AND PLATE, FACE NAIL	2-8d
1"x8" SHEATHING OR LESS TO EACH BEARING, FACE NAIL	2-8d
WIDER THAN 1"x8" SHEATHING TO EACH BEARING, FACE NAIL (SEE SECTION 2304.9.1 FOR NAILING DIAGONAL SHEATHING)	3-8d
1"x6" SUBFLOOR OR LESS TO EACH JOIST, FACE NAIL	2-8d
WIDER THAN 1"x6" SUBFLOOR TO EACH JOIST, FACE NAIL (SEE SECTION 2304.9.1 FOR NAILING DIAGONAL SHEATHING)	3-8d
2" SUBFLOOR TO JOIST OR GIRDER, BLIND AND FACE NAIL (SEE SECTION 2304.9.1 FOR NAILING DIAGONAL SHEATHING)	2-16d
BUILT-UP GIRDER AND BEAMS	20d AT 24" OC AT TOP AND BOTTOM AND STAGGERED 2-20d AT ENDS AND AT EACH SPLICE
ALL WOOD CONTACTS NOT OTHERWISE SHOWN OR NOTED	2-16d FN @ 2x MEMBERS OR LESS OR TN @ 3x AND THICKER MEMBERS.

LAST REVISION: 11/30/2015 2:00:31 PM

DRILLED-IN ANCHORS

1. EPOXY ANCHORS SHALL BE HILTI RE500-SD PER ESR-2322 OR SIMPSON SET-XP PER ESR-2508 FOR THREADED ROD & REBAR. EXPANSION ANCHORS SHALL BE HILTI KB-TZ PER ESR-1917 OR SIMPSON STRONG-BOLT PER ESR-1771. BOLT ANCHORS SHALL BE HILTI KWIK BOLT 3 PER ESR-1385 TYPE, SIZE & EMBEDMENT SHALL BE INDICATED IN DRAWINGS. POST-INSTALLED ANCHORS FOR REPAIR SHALL BE EVALUATED ON A CASE BY CASE BASIS. NOTIFY STRUCTURAL ENGINEER FOR REPAIRS.
2. ANCHORS SHALL BE INSTALLED IN ACCORDANCE WITH THE REQUIREMENTS GIVEN IN THE ICC REPORT.
3. UNLESS NOTED OTHERWISE ANCHORS HAVE BEEN DESIGNED FOR SPECIAL INSPECTION. PROVIDE SPECIAL INSPECTION AS INDICATED IN THE ICC REPORT.
4. WHEN INSTALLING DRILLED-IN ANCHORS IN EXISTING CONCRETE OR MASONRY, USE CARE AND CAUTION TO AVOID CUTTING OR DAMAGING EXISTING REINFORCING BARS. DO NOT INSTALL ANCHORS IN PRESTRESSED CONCRETE ELEMENTS OR IN AREAS WITH RADIANT TUBING EMBEDDED IN CONCRETE.
5. THE INSPECTION OF THE ANCHORS SHALL BE DONE BY A QUALIFIED INSPECTION AGENCY AND A REPORT OF THE INSPECTION RESULTS SHALL BE SUBMITTED TO THE GOVERNING AGENCY AND ARCHITECT/STRUCTURAL ENGINEER.

REINFORCEMENT LAP SPLICE SCHEDULE (ALL LENGTHS SHOWN ARE IN INCHES) — ACI 318-08, 2012 IBC, 2013 CBC

f'c = 3000 PSI CONC

SPLICE CLASS	REINF LOCATION	REINFORCEMENT SIZE #3	#4	#5	#6	#7	#8	#9	#10	#11
B	TOP	20	38	47	56	82	94	106	119	132
	OTHER	16	29	37	43	63	72	81	91	102

NOTES:

1. SCHEDULE APPLIES TO NORMAL WEIGHT CONCRETE WITH UNCOATED, GRADE 60 REINFORCING STEEL FOR #4 BARS AND LARGER (VALUES FOR #3 BARS BASED ON GRADE 40).
2. TOP REINFORCEMENT IS HORIZONTAL REINFORCEMENT LOCATED SUCH THAT MORE THAN 12 INCHES OF FRESH CONCRETE IS CAST IN THE MEMBER BELOW THE SPLICE.
3. WHERE CLEAR SPACING OF BARS BEING SPLICED IS LESS THAN 2 BAR DIA. OR WHERE CLEAR COVER OF BARS BEING SPLICED IS LESS THAN 1 BAR DIA., MULTIPLY LAP LENGTHS BY 1.50, UNO.

MASONRY

1. HOLLOW CONCRETE MASONRY UNITS SHALL BE MEDIUM WEIGHT (105 TO 125 PCF) LOAD BEARING 8x8x16 NOMINAL SIZE TYPE I IN ACCORDANCE WITH THE REQUIREMENTS OF THE 2013 CBC AND ASTM STANDARD C 90. SAMPLE AND TEST PER ASTM C140.
2. MASONRY COMPRESSIVE STRENGTH SHALL BE f' m = 1500 PSI, MINIMUM.
3. MORTAR SHALL BE TYPE M OR TYPE S PER ASTM C270 AND CBC SECTION 2103. AGGREGATE SHALL BE PER ASTM C144. PROVIDE COMPRESSIVE STRENGTH TESTS PER ASTM C780. UTILIZE PORTLAND CEMENT PER ASTM C150 AND LIME PER ASTM STANDARDS C5 AND C207 ONLY FOR CEMENTITIOUS MATERIALS FOR MORTAR.
4. GROUT SHALL BE PER ASTM C476 AND CBC SECTION 2103. GROUT SHALL DEVELOP A MINIMUM COMPRESSIVE STRENGTH OF 2500 PSI AT 28 DAYS. AGGREGATE SHALL BE PER ASTM C404. CONSOLIDATE ALL GROUT BY MECHANICAL VIBRATION. PROVIDE TESTS PER ASTM C1019. UTILIZE PORTLAND CEMENT PER ASTM C150 ONLY FOR CEMENTITIOUS MATERIALS FOR GROUT. GROUT SHALL HAVE A MAXIMUM WATER TO CEMENT RATIO OF 0.50 BY WEIGHT, PROVIDE WATER REDUCING ADMIXTURE PER ASTM C494 AS REQUIRED. SLUMP SHALL BE 8" MIN AND 11" MAX. UTILIZE SHRINKAGE COMPENSATING ADMIXTURE, SIKA GROUT AID TYPE II OR EQUIVALENT, AT MFR's MAX RECOMMENDED DOSAGE IN ALL GROUT.
5. USE OPEN END UNITS WHERE VERTICAL REINFORCEMENT OCCURS. USE BOND BEAM OR LINTEL UNITS WHERE HORIZONTAL REINFORCEMENT OCCURS.
6. ALL CELLS SHALL BE GROUTED SOLID.
7. UNITS SHALL BE LAID IN RUNNING (COMMON) BOND.
8. SPLICE VERTICAL REINFORCEMENT NEAR FLOOR LINES OR AS SHOWN ON THE DRAWINGS, ONLY. CENTER SINGLE LAYER VERTICAL REINFORCEMENT IN WALLS UNLESS NOTED OTHERWISE. DOWEL ALL VERTICAL REINFORCEMENT TO SUPPORTING MEMBERS WITH SAME SIZE REINFORCEMENT, TYP.
9. MASONRY REINFORCEMENT SHALL COMPLY WITH CONCRETE REINFORCEMENT REQUIREMENTS, UNLESS NOTED OTHERWISE.
10. ALL CONSTRUCTION SHALL BE IN ACCORDANCE WITH THE REQUIREMENTS OF CHAPTER 21 OF THE 2013 CBC, ACI 530-BUILDING CODE REQUIREMENTS FOR MASONRY STRUCTURES AND ACI 530.1 - SPECIFICATIONS FOR MASONRY STRUCTURES. IT IS THE CONTRACTOR'S RESPONSIBILITY TO OBTAIN THESE DOCUMENTS AND BECOME FAMILIAR WITH THE MATERIALS AND METHODS PROVISIONS CONTAINED THEREIN.
11. PROVIDE SPECIAL INSPECTION & TESTS FOR ALL MASONRY CONSTRUCTION IN ACCORDANCE WITH CBC CHAPTER 17, ESPECIALLY SECTION 1705.4. PROVIDE QUALITY CONTROL PER CBC SECTION 2105. INSURE COMPLIANCE WITH SPECIFIED COMPRESSIVE STRENGTH IN ACCORDANCE WITH CBC SECTION 2105.2.
12. ALL BOLTS SHALL BE GROUTED IN PLACE WITH AT LEAST 1 INCH OF GROUT BETWEEN THE BOLT AND THE MASONRY. BOLTS SHALL BE HEADED AND PER ASTM A307 GRADE A WITH SUPPLEMENTARY REQUIREMENT S1.
13. MASONRY VENEER SHALL COMPLY WITH REQUIREMENTS OF CBC CHAPTER 14. SEE ARCHITECTURAL DRWG.'s & SPECIFICATIONS FOR ADDITIONAL INFO.

LIGHT GAGE - COLD FORMED STEEL FRAMING

1. ALL LIGHT GAGE FRAMING SHALL BE PER THE REQUIREMENTS OF THE 2013 CBC AND THE NORTH AMERICAN SPECIFICATION FOR THE DESIGN OF COLD-FORMED STEEL STRUCTURAL MEMBERS (AISI-NAS-01) OF THE AMERICAN IRON AND STEEL INSTITUTE (2013 CBC CHAPTER 22, SECTION 2210).
2. ALL LIGHT GAGE FRAMING SHALL BE G60 HOT-DIP GALVANIZED, UNLESS INDICATED OTHERWISE.
3. ALL WELDING SHALL BE IN ACCORDANCE WITH THE REQUIREMENTS OF THE CBC AND THE STRUCTURAL WELDING CODE - SHEET STEEL OF THE AMERICAN WELDING SOCIETY, AWS D1.3, LATEST REVISION.
4. ALL SCREWS SHALL BE TEKS/TRAXX SELF-DRILLING SCREWS BY ITW BUILDEX, OR APPROVED EQUIVALENT. INSTALL PER MANUFACTURER'S INSTRUCTIONS AND RECOMMENDATIONS FOR MAXIMUM RATED LOADING CAPACITIES.
5. ALL COLD FORMED STEEL PRODUCTS TO BE UTILIZED SHALL BE COVERED BY EVALUATION REPORTS OF THE INTERNATIONAL CODE COUNCIL (ICC/ICBO) VERIFYING ALL SECTION AND STRENGTH PROPERTIES NECESSARY FOR DESIGN.
6. LIGHT GAGE - COLD FORMED STEEL MEMBERS SHALL BE PER ASTM A653, STRUCTURAL QUALITY. UNLESS NOTED OTHERWISE, MEMBERS SHALL HAVE A YIELD STRENGTH (Fy) OF 55,000 PSI
7. SEE (3/S004) FOR MINIMUM REQUIRED PROPERTIES OF MEMBERS. THE MINIMUM BASE-METAL THICKNESS (NOT INCLUDING GALVANIZED COATING) OF MEMBERS DELIVERED TO THE JOB SITE MUST BE AT LEAST 95% OF THE DESIGN BASE-METAL THICKNESS PER 2007 AISI-NAS WITH 2004 SUPPLEMENT.

WOOD

1. STRUCTURAL FRAMING SHALL BE DOUGLAS FIR - LARCH GRADED IN ACCORDANCE WITH PS20 AMERICAN SOFTWOOD LUMBER STANDARD, AND WITH THE WESTERN LUMBER GRADING RULES OF THE WESTERN WOOD PRODUCTS ASSOCIATION OR STANDARD GRADING RULES NO. 17 OF THE WEST COAST LUMBER INSPECTION BUREAU, LATEST REVISIONS. WOOD MEMBERS SHALL HAVE A MAXIMUM MOISTURE CONTENT OF 19% AT TIME OF INSTALLATION. DOUGLAS FIR SOUTH IS NOT ALLOWED. EACH PIECE SHALL BE GRADE MARKED AND NO PIECE MAY FALL BELOW THE GRADES INDICATED. GRADES SHALL BE AS FOLLOWS UNLESS NOTED OTHERWISE ON THE DRAWINGS.
   ALL FRAMING EXCEPT AS NOTED -------NO. 1
   6x AND THICKER MEMBERS ----------SELECT STRUCTURAL (FREE OF HEART CENTER)
2. ALL PLYWOOD SHOWN ON THESE DRAWINGS SHALL BE STRUCTURAL I, C-D WITH EXTERIOR GLUE IN ACCORDANCE WITH U.S. PRODUCT STANDARD PS 1-95 AND UBC STANDARD 23-2. ALL PANELS SHALL BE MARKED WITH AN APA GRADE MARK WITH A PANEL SPAN RATING IN ACCORDANCE WITH CBC TABLE ETC. USE 4'x8' PANELS, MINIMUM, EXCEPT AT BOUNDARIES AND FRAMING CHANGES WHERE THE MINIMUM PANEL DIMENSION SHALL BE 24" AT ROOFS OR FLOORS UNLESS PANEL IS SUPPORTED AT ALL FOUR SIDES BY FRAMING OR BLOCKING. MINIMUM PANEL DIMENSION AT WALLS SHALL BE 12".
3. PLYWOOD FLOOR SHEATHING SHALL BE GLUED TO FLOOR JOISTS, TRUSSES AND/OR BEAMS, IN ADDITION TO THE NAILING INDICATED ON THESE DRAWINGS, IN ACCORDANCE WITH AMERICAN PLYWOOD ASSOCIATION (APA) SPECIFICATION AFG-01.
4. SILL PLATES (AND OTHER MEMBERS NOTED AS PPT) SHALL BE PRESSURE PRESERVATIVE TREATED DOUGLAS FIR. PRESSURE PRESERVATIVE TREATED MEMBERS SHALL BE PER THE REQUIREMENTS OF AWPA AND AWPB (PROCEDURE LP-2 UNLESS OTHERWISE NOTED). PPT MEMBERS SHALL BE PRESERVATIVE TREATED AT ALL CUTS, NOTCHES, AND HOLES IN ACCORDANCE WITH AWPA M4, AS APPROVED. ALL CUTS IN SILL PLATES GREATER THAN ONE THIRD THE PLATE WIDTH SHALL HAVE ADDITIONAL SILL BOLTS PROVIDED AS REQUIRED AT SILL BREAKS.
5. BOLTS FOR TIMBER CONNECTIONS SHALL BE FULL DIAMETER BODY AND PER THE REQUIREMENTS OF ASTM A307, GRADE A AND ANSI/ASME STANDARD B18.2.1, UNLESS OTHERWISE NOTED. BOLTS SHALL BE INSTALLED IN ACCORDANCE WITH THE REQUIREMENTS OF THE 2013 CALIFORNIA BUILDING CODE (CBC), CHAPTER 23, AND ANSI/AF&PA NDS-2012, 2012 NATIONAL DESIGN SPECIFICATION FOR WOOD CONSTRUCTION OF THE AMERICAN FOREST AND PAPER ASSOCIATION (NDS), AND SHALL HAVE A MINIMUM BENDING YIELD STRENGTH OF 45,000 PSI. BOLT HOLES SHALL BE 1/16 INCH LARGER THAN BOLT DIAMETER. RE-TIGHTEN BOLTS BEFORE CLOSING IN WORK.
6. LAG SCREWS SHALL CONFORM TO ANSI/ASME STANDARD B18.2.1, THE REQUIREMENTS OF THE 2013 CALIFORNIA BUILDING CODE, CHAPTER 23, AND THE NDS. HOLES FOR LAG SCREW SHANKS SHALL BE BORED THE SAME DEPTH AND DIAMETER AS THE SHANK. THE REMAINING DEPTH OF PENETRATION OF THE SCREW SHALL BE BORED TO 70% OF THE SHANK DIAMETER. PROVIDE FULL DIAMETER BODY, STEEL LAG SCREWS WITH MINIMUM BENDING YIELD STRENGTHS PER THE NDS.
7. PROVIDE MALLEABLE IRON WASHERS OR STANDARD CUT PLATE WASHERS UNDER NUTS AND BOLT OR LAG SCREW HEADS WHICH BEAR ON WOOD, UON. PROVIDE 1/4"x3"x3" WASHERS AT SILL PLATE ANCHOR BOLTS.
8. WOOD SCREWS SHALL CONFORM TO ANSI/ASME STANDARD B18.6.1, THE REQUIREMENTS OF THE 2013 CALIFORNIA BUILDING CODE, CHAPTER 23, AND THE NDS. WOOD SCREWS SHALL BE STEEL, WITH MINIMUM BENDING YIELD STRENGTHS PER THE NDS AND CUT THREADS. LEAD HOLES FOR SCREWS SHALL BE 7/8 OF THE SHANK DIAMETER AT THE SHANK (UNTHREADED PORTION) AND 7/8 OF THE THREAD ROOT DIAMETER FOR THE THREADED PORTION OF THE SCREW.
9. WOOD MEMBERS SHALL BE CUT OR NOTCHED ONLY AS SHOWN ON STRUCTURAL DRAWINGS.
10. WHEN REQUIRED NAILING TENDS TO SPLIT WOOD MEMBERS, NAIL HOLES SHALL BE PRE-BORED TO 3/4 OF THE NAIL DIAMETER.
11. STRUCTURAL NAILING SHALL BE WITH FULL HEAD COMMON STEEL WIRE NAILS PER FEDERAL SPECIFICATION FF-N-105B, ALL REQUIREMENTS OF THE 2013 CALIFORNIA BUILDING CODE, CHAPTER 23, AND THE NDS. NAILING NOT SPECIFICALLY INDICATED SHALL COMPLY WITH CBC TABLE 2304.9.1. NAILS, BOLTS, LAG SCREWS, OTHER FASTENERS, CONNECTERS & ALL OTHER STEEL ITEMS EXPOSED TO WEATHER, HUMID CONDITIONS, OR IN PRESSURE PRESERVATIVE TREATED MEMBERS SHALL BE HOT DIP GALVANIZED TO G185 MIN, OR TYPE 304 OR 316 STAINLESS STEEL. PROVIDE ELECTROGALVANIZED ELSEWHERE. PROVIDE NAILS WITH MINIMUM BENDING YIELD STRENGTHS PER TABLES 11N, 11P, & 11R OF THE NDS.
12. NAILING OF BLOCKING FOR FLOOR AND ROOF FRAMING MEMBERS SHALL BE AS FOLLOWS, UNLESS NOTED OTHERWISE ON THE DRAWINGS:
    BLOCKING TO FLOOR OR ROOF FRAMING - 4-10d TOENAILS EACH END. (2 EACH SIDE)
    PLYWOOD ABOVE TO BLOCKING - PLYWOOD EDGE NAILS AND SPACING.
    BLOCKING TO FLOOR OR ROOF SUPPORT - 16d TOENAILS AT PLYWOOD EDGE NAIL SPACING OR 4-16d MINIMUM. (1/2 EACH SIDE BLOCKING)
13. PROVIDE CROSS BRIDGING, SOLID BRIDGING OR OTHER LATERAL SUPPORT FOR ALL FRAMING MEMBERS IN ACCORDANCE WITH THE REQUIREMENTS OF NDS AND CBC SECTION 2308.8.5.
14. INFORMATION IN BOX [ ] INDICATES MODEL NUMBER OF CONNECTOR HARDWARE BY THE SIMPSON COMPANY, SAN LEANDRO, CALIFORNIA. INSTALL IN ACCORDANCE WITH THE MANUFACTURER'S INSTRUCTIONS FOR MAXIMUM RATED LOADS, UON.
15. EXCEPT WHERE MORE STRINGENT CONSTRUCTION IS SHOWN ON THE DRAWINGS, WOOD CONSTRUCTION SHALL COMPLY WITH CBC SECTION 2308, CONVENTIONAL LIGHT FRAME CONSTRUCTION PROVISIONS, AS A MINIMUM.
16. PRESSURE PRESERVATIVE TREATMENT SHALL BE PER THE CBC AND AWPA STANDARDS UON. ALL CUTS, HOLES AND NOTCHES SHALL BE FIELD TREATED PER AWPA M4. ALL TREATED MEMBERS SHALL BE IDENTIFIED WITH CERTIFICATION STAMP OF AN APPROVED INDEPENDENT AGENCY ACCREDITED BY THE AMERICAN LUMBER STANDARDS COMMITTEE PER CBC SECTION 2303.1.8.
17. FRAMING MEMBERS OR PLYWOOD SHEATHING SHALL BE DAPPED OR NOTCHED TO ACCOMMODATE TOP FLANGES OF JOIST OR BEAM HANGERS, SHEET METAL STRAPS, AND OTHER CONNECTION HARDWARE INDICATED ON THESE DRAWINGS. DAPS, CUTS, OR NOTCHES SHALL BE MADE IN A NEAT MANNER AND SHALL BE THE MINIMUM SIZE AND DEPTH NECESSARY TO ALLOW MEMBERS TO FIT TIGHT, SHEATHING TO BE FLAT AND BEAR ON SUPPORT MEMBERS, AND AVOID UNSIGHTLY OR OTHERWISE UNACCEPTABLE UNDULATIONS IN ROOFING, FLOORING OR FINISHES.

SIZE (PENNY)	DIAMETER (INCHES)	MIN. PENETRATION (INCHES)
8d	0.131	1.57"
10d	0.148	1.78"
16d	0.162	1.94"
20d	0.192	2.30"

PENETRATION IS MEASURED INTO THE PIECE RECEIVING THE NAIL POINT. 1 1/2 INCHES OF PENETRATION FOR 10d AND 16d NAILS IS ACCEPTABLE FOR TOP PLATES AND DOUBLED 2x MEMBERS. WHERE THE NAIL PENETRATION WILL BE LESS THAN SPECIFIED, INCREASE NAIL LENGTH TO OBTAIN THE PENETRATION REQUIRED FOR THE NAIL SPECIFIED.

5 — TYPICAL NAIL PENETRATIONS TABLE
COMMON WIRE NAILS

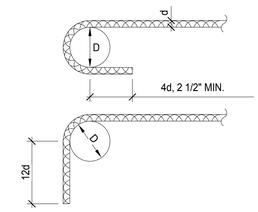

INSIDE BEND DIAMETERS

BAR SIZE	D
#3 TO #8	6d
#9,#10,#11	8d
#14,#18	10d

TYPICAL (U.O.N.)

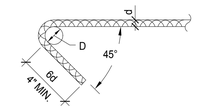

INSIDE BEND DIAMETERS

BAR SIZE	D
#3	1 1/2"
#4	2"
#5	2 1/2"

STIRRUPS & TIES

NOTE: ALL BARS BENT COLD - NO FIELD BENDING ALLOWED EXCEPT WHERE SPECIFICALLY SHOWN ON DRAWINGS

1 — TYPICAL STD HOOKS & BENDS IN REINF STEEL
NTS

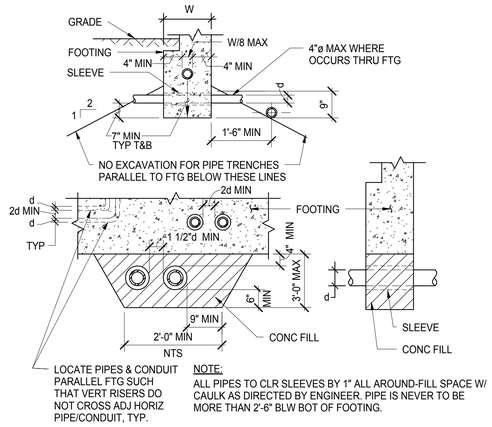

2 — TYPICAL PIPE AT FOOTING DETAILS
NTS

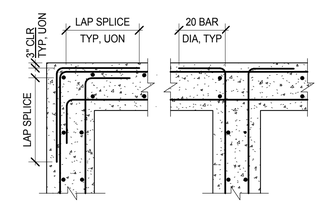

3 — TYPICAL CONCRETE REINF DETAIL
NTS

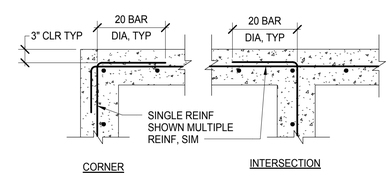

4 — TYPICAL CONCRETE REINF DETAIL
NTS

KITCHELL
Capital Expenditure Managers
2750 Gateway Oaks Drive
Suite 300
Sacramento, CA. 95833
(916) 648-9700

BCAG BUTTE COUNTY ASSOCIATION OF GOVERNMENTS

BUTTE REGIONAL TRANSIT OPERATIONS CENTER
326 HUSS LANE, CHICO CA

BUTTE COUNTY ASSOCIATION OF GOVERNMENTS

PROJECT STATUS:
BID SET
BUILDINGS:

SHEET TITLE:
GENERAL NOTES AND TYPICAL DETAILS

SCALE: 0 1/2 1 — BAR IS ONE INCH ON ORIGINAL DRAWING. IF NOT ONE INCH ON THIS SHEET, ADJUST SCALES ACCORDINGLY

REVISIONS

No.	Description	Date

JOB NO. 5006A3
DATE 12/3/15
SHEET S002

C:\BIM\BCAG TI_hornberger.rvt

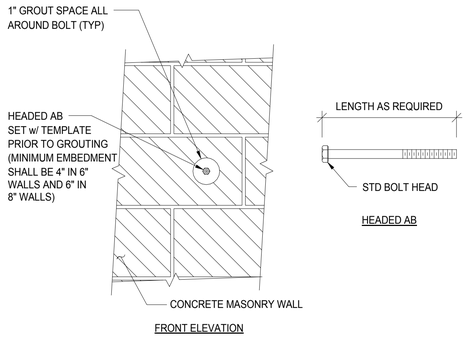

8 TYPICAL BOLT INSTALLATION IN MASONRY DETAIL
1 1/2" = 1'-0"

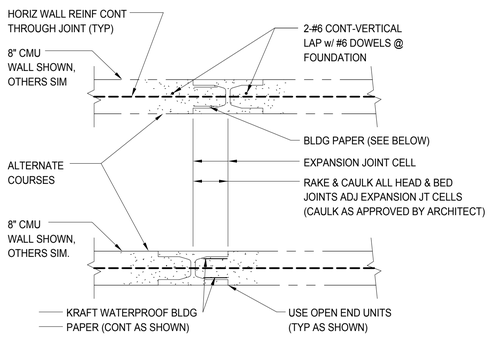

NOTE:
PROVIDE @ 50'-0" OC MAX UON - IF LOCATIONS NOT SHOWN ON ARCH DRWGS SUBMIT PROPOSED LOCATIONS FOR APPROVAL BY ARCHITECT AND ENGINEER PRIOR TO BEGINNING WORK, TYP.

9 TYPICAL CMU EXPANSION JOINT DETAIL
3/4" = 1'-0"

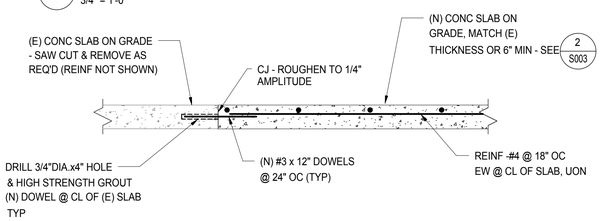

10 TYPICAL (N) SLAB ON GRADE @ (E) SLAB DETAIL
NTS

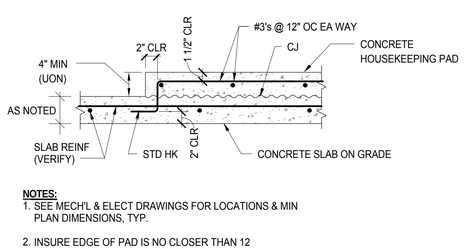

NOTES:
1. SEE MECH'L & ELECT DRAWINGS FOR LOCATIONS & MIN PLAN DIMENSIONS, TYP.
2. INSURE EDGE OF PAD IS NO CLOSER THAN 12 DIAMETERS TO ANY ANCHOR BOLT OR EXPANSION ANCHOR INSTALLED IN THE PAD, TYP.

11 TYPICAL HOUSEKEEPING PAD @ (N) CONC SLAB DETAIL
NTS

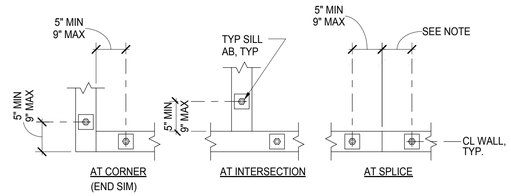

NOTE: WHERE HOLDOWN AB's OCCUR, LOCATE TYP SILL AB's 5" TO 9" FROM HOLDOWN AB.

4 TYPICAL ANCHOR BOLTS DETAIL
1" = 1'-0"

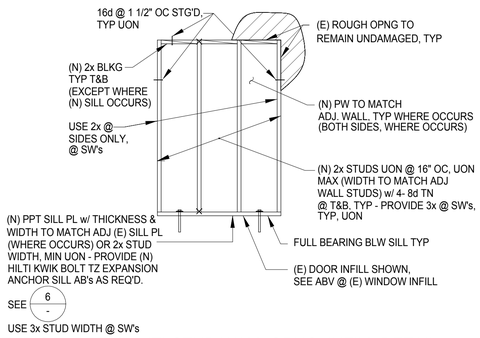

5 TYPICAL DETAIL - (E) STUD WALL OPNG. INFILL DETAIL
N.T.S.

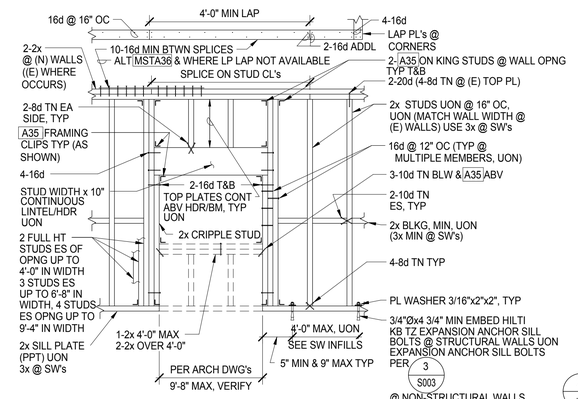

6 TYPICAL INTR STUD WALL DETAIL
NTS

(NOTE: USE A34's IN LIEU OF A35's @ 2X4 STUD WALLS)

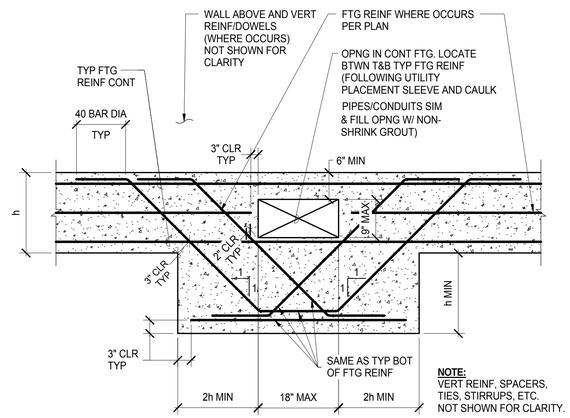

1 TYPICAL OPENING AT FOOTING DETAIL
3/4" = 1'-0"

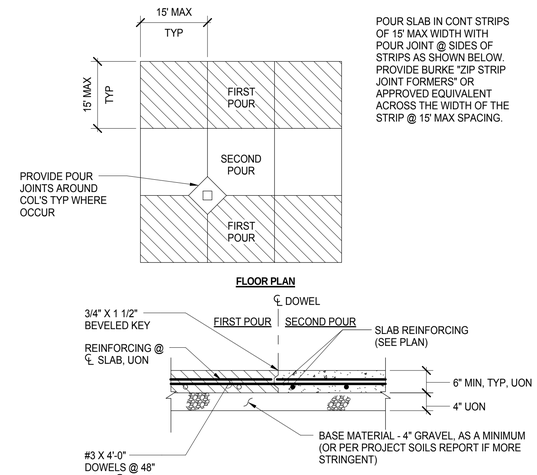

POUR SLAB IN CONT STRIPS OF 15' MAX WIDTH WITH POUR JOINT @ SIDES OF STRIPS AS SHOWN BELOW. PROVIDE BURKE "ZIP STRIP JOINT FORMERS" OR APPROVED EQUIVALENT ACROSS THE WIDTH OF THE STRIP @ 15' MAX SPACING.

2 TYPICAL SLAB & POUR JOINT IN SLAB DETAIL
3/4" = 1'-0"

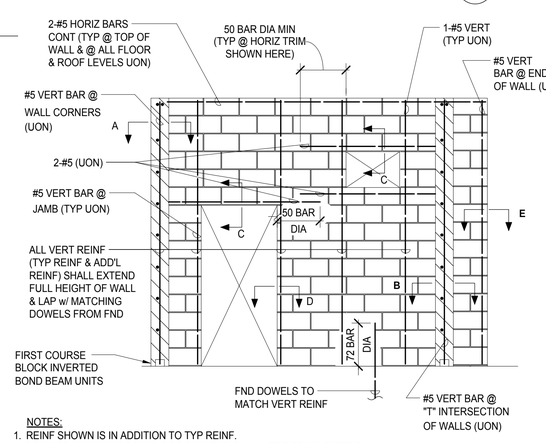

NOTES:
1. REINF SHOWN IS IN ADDITION TO TYP REINF.
2. PROVIDE MATCHING DOWELS TO FND, TYP @ ALL VERT REINF. EXTEND DOWELS TO 3" CLR FROM BO FTG w/ STD 90° HK UON.

7 TYPICAL CONCRETE MASONRY WALL DETAILS
3/4" = 1'-0"

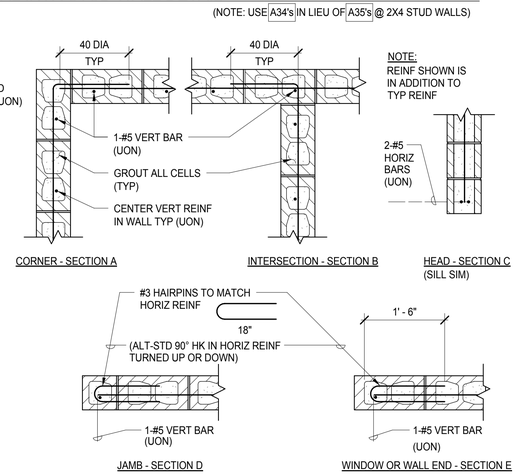

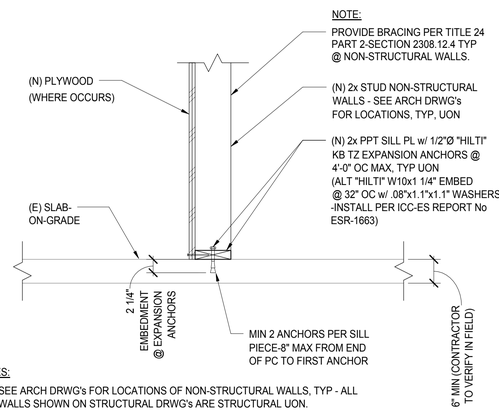

NOTES:
1. SEE ARCH DRWG's FOR LOCATIONS OF NON-STRUCTURAL WALLS, TYP - ALL WALLS SHOWN ON STRUCTURAL DRWG's ARE STRUCTURAL UON.
2. DETAIL APPLIES ONLY TO INTERIOR LCTN's.
3. NON-STRUCTURAL WALLS ARE NON-BEARING & NON-SHEAR INTERIOR WALLS.

3 TYPICAL (N) NON-STRUCTURAL WALL @ (E) SLAB ON GRADE DETAIL
N.T.S.

KITCHELL
Capital Expenditure Managers
2750 Gateway Oaks Drive
Suite 300
Sacramento, CA. 95833
(916) 648-9700

BCAG BUTTE COUNTY ASSOCIATION OF GOVERNMENTS

BUTTE REGIONAL TRANSIT OPERATIONS CENTER
326 HUSS LANE, CHICO CA

BUTTE COUNTY ASSOCIATION OF GOVERNMENTS

PROJECT STATUS:
BID SET
BUILDINGS:

SHEET TITLE:
STRUCTURAL TYPICAL DETAILS

SCALE: 0 1/2 1 — BAR IS ONE INCH ON ORIGINAL DRAWING. IF NOT ONE INCH ON THIS SHEET, ADJUST SCALES ACCORDINGLY

REVISIONS

No.	Description	Date

JOB NO. 5006A3
DATE 12/3/15
SHEET S003

LAST REVISION: 11/30/2015 2:00:34 PM

C:\BIM\BCAG TI_homberger.rvt

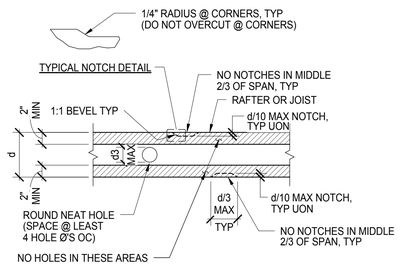

NOTE:
1. DO NOT NOTCH ENDS @ BEARING POINTS, UNLESS DETAILED SPECIFICALLY ON PLANS (AND IN NO CASE EXCEED d/4).
2. NO MORE THAN ONE INTR NOTCH ALLOWED PER MEMBER.

7 TYPICAL ALLOWED CUTS IN RAFTERS & JOISTS DETAIL
1" = 1'-0"

(APPLIES TO 2x & 3x MEMBERS ONLY-NOTCHES ALLOWED IN 4x MEMBERS ONLY @ ENDS)

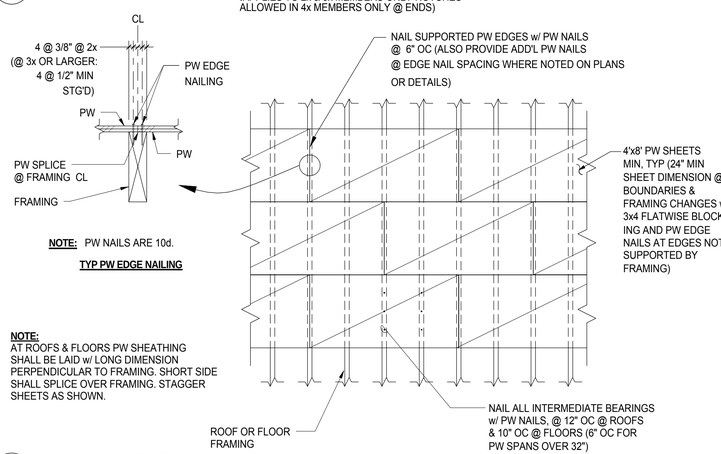

NOTE: PW NAILS ARE 10d.

TYP PW EDGE NAILING

NOTE:
AT ROOFS & FLOORS PW SHEATHING SHALL BE LAID w/ LONG DIMENSION PERPENDICULAR TO FRAMING. SHORT SIDE SHALL SPLICE OVER FRAMING. STAGGER SHEETS AS SHOWN.

8 TYPICAL PW SHEATHING DETAIL
1" = 1'-0"

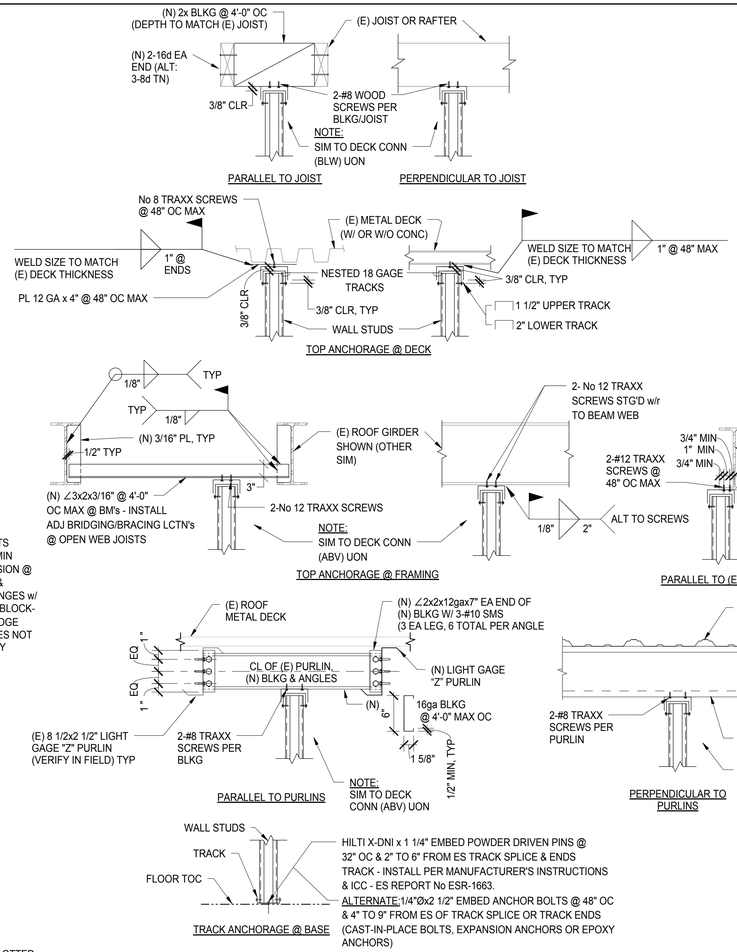

4 TYPICAL NON STRUCTURAL INTR LIGHT GAUGE STUD WALL CONNECTIONS
1" = 1'-0"

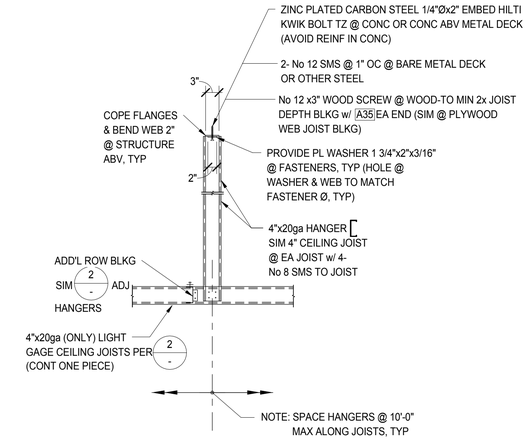

1 TYPICAL DETAIL - INTERMEDIATE HANGERS @ LIGHT GAUGE STEEL CEILING JOISTS
NTS

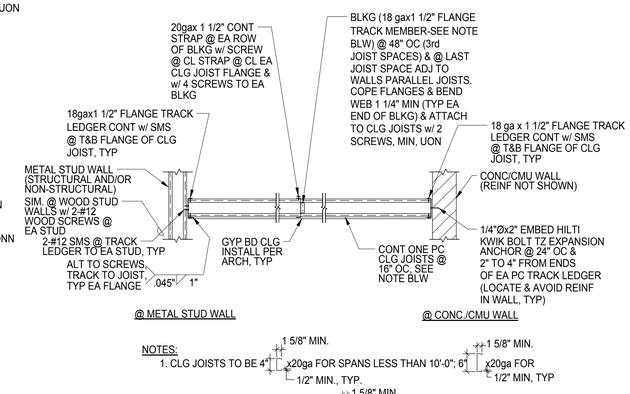

NOTES:
1. CLG JOISTS TO BE 4" x20ga FOR SPANS LESS THAN 10'-0"; 1 5/8" MIN. 1/2" MIN., TYP. 6" x20ga FOR 1 5/8" MIN. 1/2" MIN, TYP
   SPANS BETWEEN 10'-0" & 12'-0" & 6" x18ga FOR SPANS GREATER THAN 12'-0" & LESS THAN 16'-0". 1 5/8" MIN. 1/2" MIN, TYP
   ALL CLG JOISTS TO BE ASTM A653 STRUCTURAL QUALITY (SS), GRADE 33 (Fy=33 ksi) MIN.
2. BLKG TO OCCUR @ FOLLOWING LCTN's ALONG CLG JOISTS: @ MID-SPAN FOR SPANS LESS THAN 12'-0" & @ ONE THIRD POINTS FOR SPANS BETWEEN 12'-0" & 16'-0". NO BLKG REQ'D FOR CLG JOIST SPANS LESS THAN 6'-0" UON.
3. ALL SCREWS No 8 SELF-TAPPING SHEET METAL SCREWS, UON - TRAXX BY ITW BUILDEX OR APPROVED EQUIVALENT MIN OC SPACING OF SCREWS IS 1", TYP UON. MIN EDGE DISTANCE - CL SCREW TO MEMBER EDGE IS 1/2", TYP UON.
4. WHEN JOIST SPANS EXCEED LIMITS GIVEN ABV-INTERMEDIATE HANGERS PER 1 - MAY BE UTILIZED TO REDUCE JOIST SPANS (UTILIZE 4"x20ga JOISTS ONLY FOR THIS OPTION).

2 TYPICAL DETAIL - LIGHT GAUGE STEEL CLG JOISTS
1/2" = 1'-0"

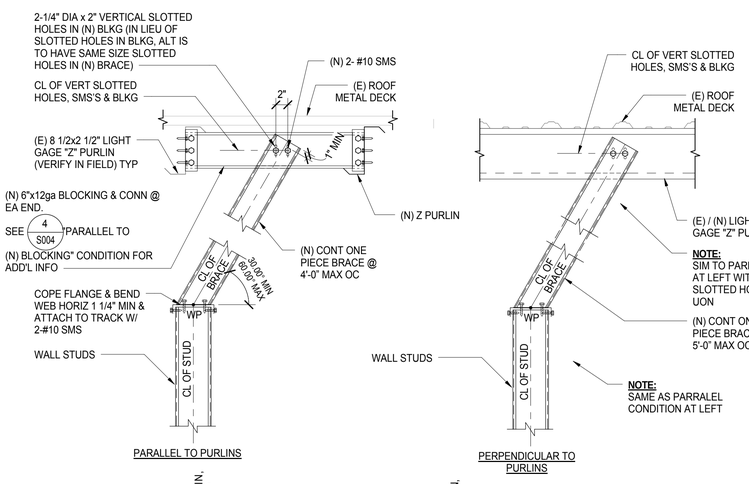

NOTES:
1. BRACE TO BE 4" x20ga FOR LENGTHS LESS THAN 10'-0"; 1/2" MIN, TYP; 1 5/8"
   6" FOR LENGTHS BETWEEN 10'-0" & 20'-0". 1/2" MIN, TYP; 1 5/8"
   ALL BRACES TO BE ASTM A653 STRUCTURAL QUALITY (SS), GRADE 33 (Fy = 33ksi) MIN.
2. ALL SCREWS TO BE SELF-TAPPING SHEET METAL SCREWS, UON-TRAXX BY ITW BUILDEX OR APPROVED EQUIVALENT. MIN OC SPACING OF SCREWS IS 1", TYP UON. MIN EDGE DISTANCE - CL SCREW TO MEMBER EDGE IS 1/2" , TYP UON.
3. FOR OTHER CASES OF NON STRUCTURAL INTERIOR LIGHT GAUGE STUD WALL CONNECTION, SEE 4 S004

9 TYPICAL PARTIAL HEIGHT NON STRUCTURAL INTERIOR LIGHT GAUGE STUD WALL CONNECTIONS
1" = 1'-0"

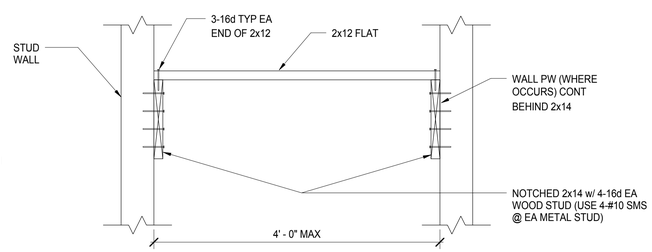

5 TYPICAL WOOD STAIR @ STUD WALL DETAIL
1" = 1'-0"

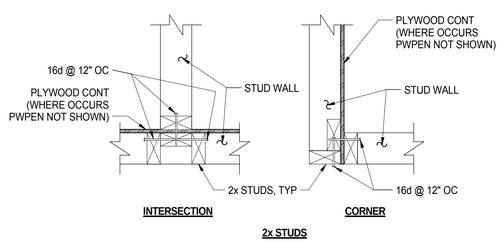

6 TYPICAL WALL INTERSECTION CONNECTION DETAILS
1 1/2" = 1'-0"

SHAPE NAME	GROSS SECTION PROPERTIES										
					AXIS X-X			AXIS Y-Y			Z PURLINS
	DxB1xB2	GA	WEIGHT LB/FT	AREA IN²	IX IN⁴	SX IN³	RX IN	IX IN⁴	SX IN³	RX IN	
Z8.5x2.5	8.5x2.5x2.5	16	2.86	0.84	8.99	2.12	3.27	1.14	0.39	1.17	

16 GA = 0.05 INCHES
R (16 GA) = 0.218 INCHES

NOTE:
UNITS ARE IN INCHES UON.

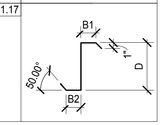

3 TYP MIN COLD FORMED (LIGHT GAUGE) STL MEMBER PROPERTIES
1" = 1'-0"

KITCHELL
Capital Expenditure Managers
2750 Gateway Oaks Drive
Suite 300
Sacramento, CA. 95833
(916) 648-9700

BCAG BUTTE COUNTY ASSOCIATION OF GOVERNMENTS

BUTTE REGIONAL TRANSIT OPERATIONS CENTER
326 HUSS LANE, CHICO CA

BUTTE COUNTY ASSOCIATION OF GOVERNMENTS

PROJECT STATUS:
BID SET

BUILDINGS:

SHEET TITLE:
STRUCTURAL TYPICAL DETAILS

SCALE: 0 1/2 1
BAR IS ONE INCH ON ORIGINAL DRAWING. IF NOT ONE INCH ON THIS SHEET, ADJUST SCALES ACCORDINGLY

REVISIONS

No.	Description	Date

JOB NO. 5006A3
DATE 12/3/15
SHEET S004

LAST REVISION: 11/30/2015 2:00:36 PM

C:\BIM\BCAG TI_hornberger.rvt

LEGEND:

- (N) 8" CMU WALL GROUTED SOLID, W/ #5 @ 16" OC VERT @ CL WALL & #4 @ 24" OC HORIZ
- (E) 8" CMU WALL
- (N) 2x4 @ 16" OC STUD WALL, SEE 6/S003 UON
- (E) STUD WALL
- (N) NON STRUCTURAL WALL

FOUNDATION NOTES:

1. VERIFY ALL DIMENSIONS WITH ARCH'L DWG'S. IN CASE OF CONFLICT, ARCH'L DWG'S WILL GOVERN.
2. AT (N) NON-STRUCTURAL WALLS (SHOWN ON ARCH'L DWG'S), SEE 4/S004

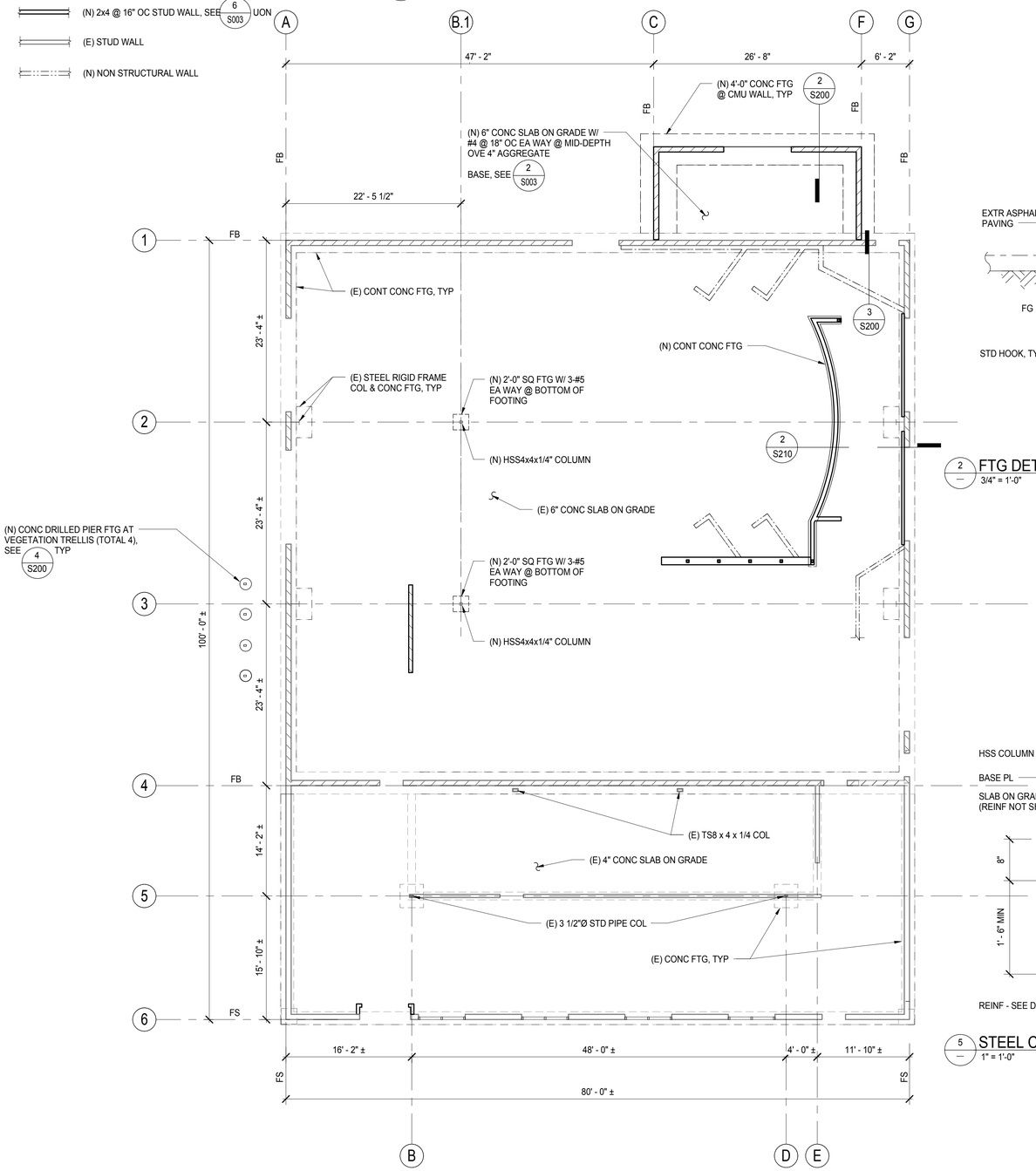

1 FOUNDATION PLAN
1/8" = 1'-0"

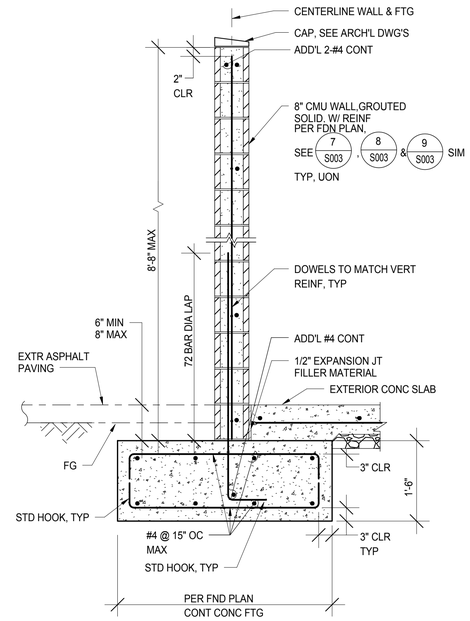

2 FTG DETAIL - TYPICAL SITE FENCE
3/4" = 1'-0"

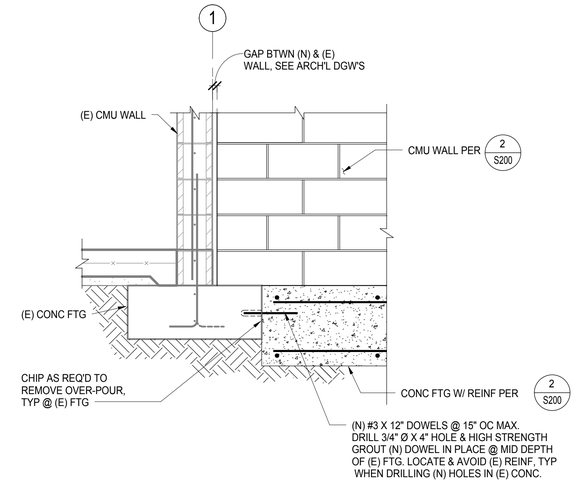

3 (N) CMU WALL ADJACENT (E) CMU WALL
3/4" = 1'-0"

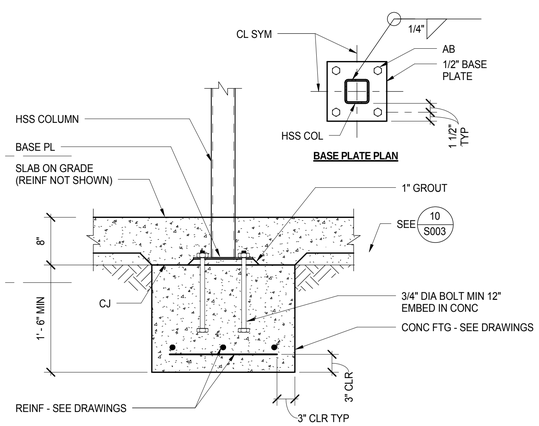

5 STEEL COLUMN AT INTERIOR FOOTING
1" = 1'-0"

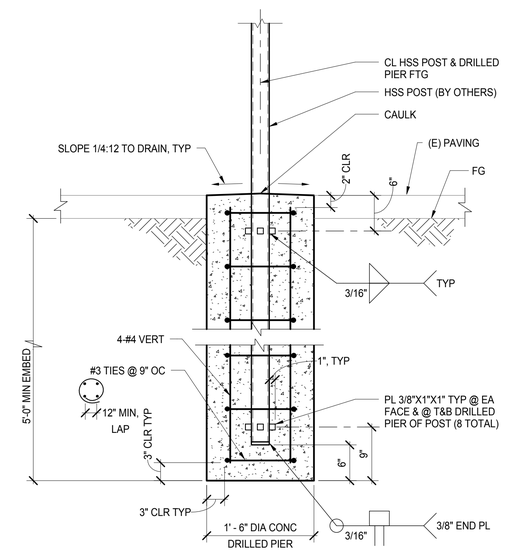

4 CONCRETE DRILLED PIER FOOTING DETAIL
1" = 1'-0"

KITCHELL
Capital Expenditure Managers
2750 Gateway Oaks Drive
Suite 300
Sacramento, CA. 95833
(916) 648-9700

BCAG BUTTE COUNTY ASSOCIATION OF GOVERNMENTS

BUTTE REGIONAL TRANSIT OPERATIONS CENTER
326 HUSS LANE, CHICO CA

BUTTE COUNTY ASSOCIATION OF GOVERNMENTS

PROJECT STATUS:
BID SET

BUILDINGS:

SHEET TITLE:
FOUNDATION PLAN & DETAILS

SCALE: 0 1/2 1 — BAR IS ONE INCH ON ORIGINAL DRAWING. IF NOT ONE INCH ON THIS SHEET, ADJUST SCALES ACCORDINGLY

REVISIONS

No.	Description	Date

JOB NO. 5006A3
DATE 12/3/15
SHEET S200

LAST REVISION: 11/30/2015 2:00:38 PM

C:\BIM\BCAG TI_hornberger.rvt

LEGEND:

- (N) 8" CMU WALL GROUTED SOLID, W/ #5 @ 16" OC VERT @ CL WALL & #4 @ 24" OC HORIZ
- (E) 8" CMU WALL
- (N) 2x4 @ 16" OC STUD WALL, SEE 6/S003 UON
- (N) NON STRUCTURAL WALL
- (N) 4x4 POST

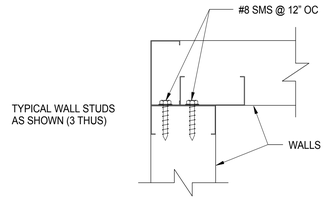

@ CORNER

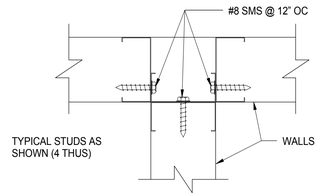

@ INTERSECTION

8/— TYP LIGHT GAGE STUDS @ CORNER / INTERSECTION
3" = 1'-0"

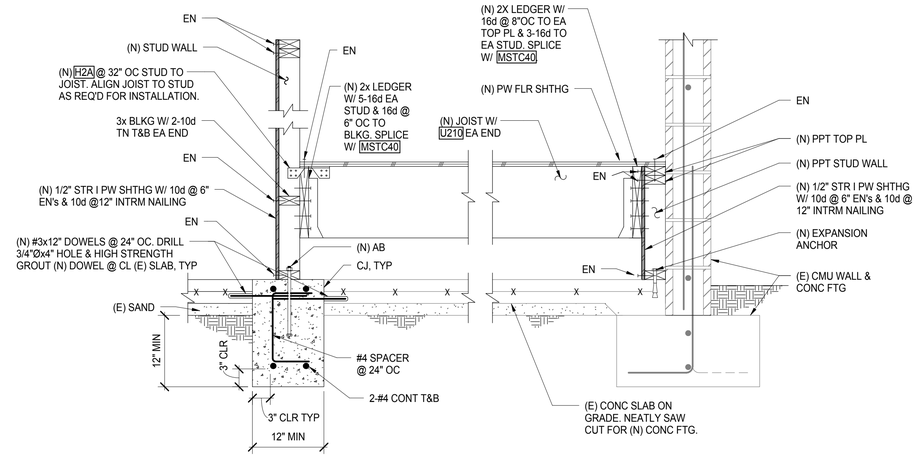

2/— SECTION - NEW RAISED PLATFORM TO WALLS
1" = 1'-0"

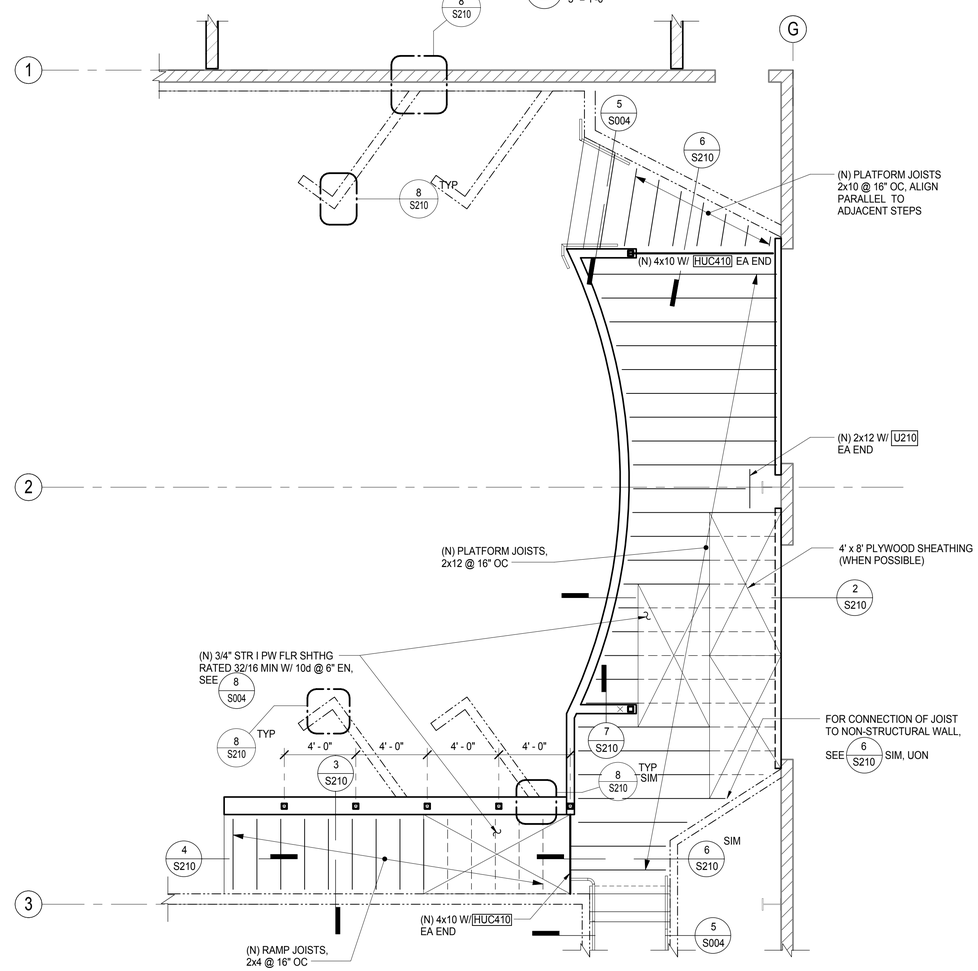

1/— ENLARGED PLATFORM & RAMP FRAMING PLAN
1/4" = 1'-0"

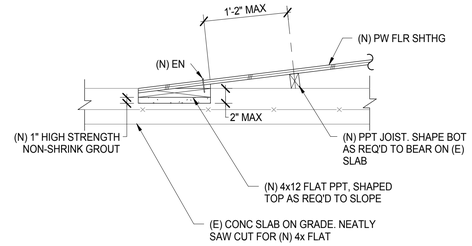

4/— SECTION - NEW RAMP LANDING
1" = 1'-0"

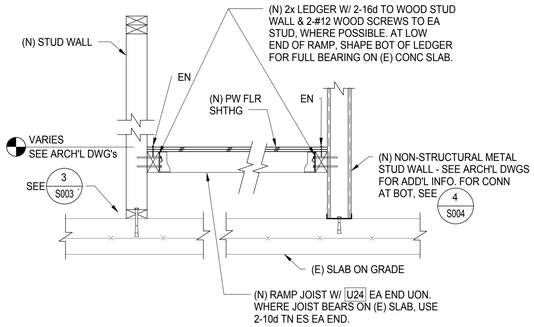

3/— SECTION - NEW RAMP
1" = 1'-0"

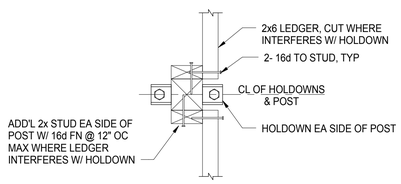

PLAN A-A

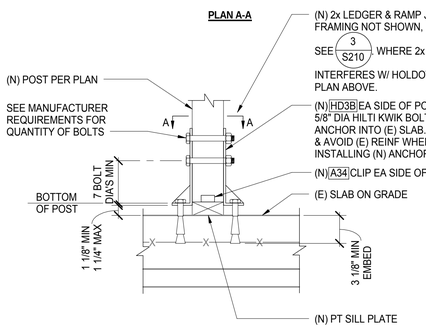

5/— (N) POST TO (E) SLAB
1 1/2" = 1'-0"

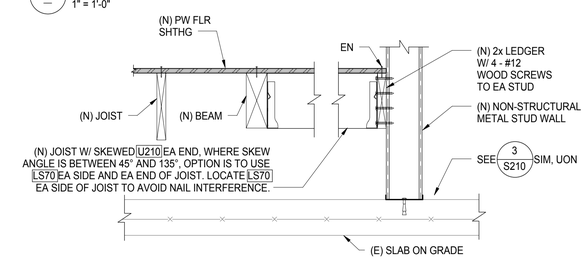

6/— SECTION-(N) RAISED PLATFORM TO BEAM & WALL
1" = 1'-0"

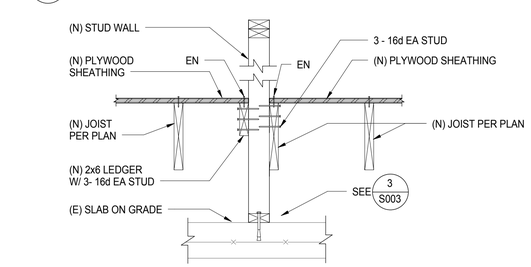

7/— SECTION - (N) JOISTS PARRALEL TO WALL
1" = 1'-0"

LAST REVISION: 11/30/2015 2:00:39 PM

KITCHELL
Capital Expenditure Managers
2750 Gateway Oaks Drive
Suite 300
Sacramento, CA. 95833
(916) 648-9700

BCAG BUTTE COUNTY ASSOCIATION OF GOVERNMENTS

BUTTE REGIONAL TRANSIT OPERATIONS CENTER
326 HUSS LANE, CHICO CA

BUTTE COUNTY ASSOCIATION OF GOVERNMENTS

PROJECT STATUS:

BID SET

BUILDINGS:

SHEET TITLE:

ENLARGED PLATFORM / RAMP FRAMING PLAN & DETAILS

SCALE: 0 1/2 1 BAR IS ONE INCH ON ORIGINAL DRAWING. IF NOT ONE INCH ON THIS SHEET, ADJUST SCALES ACCORDINGLY

REVISIONS

No.	Description	Date

JOB NO. 5006A3

DATE 12/3/15

SHEET S210

C:\BIM\BCAG TI_hornberger.rvt

LEGEND:

(E) 8" CMU WALL

(N) NON STRUCTURAL WALL

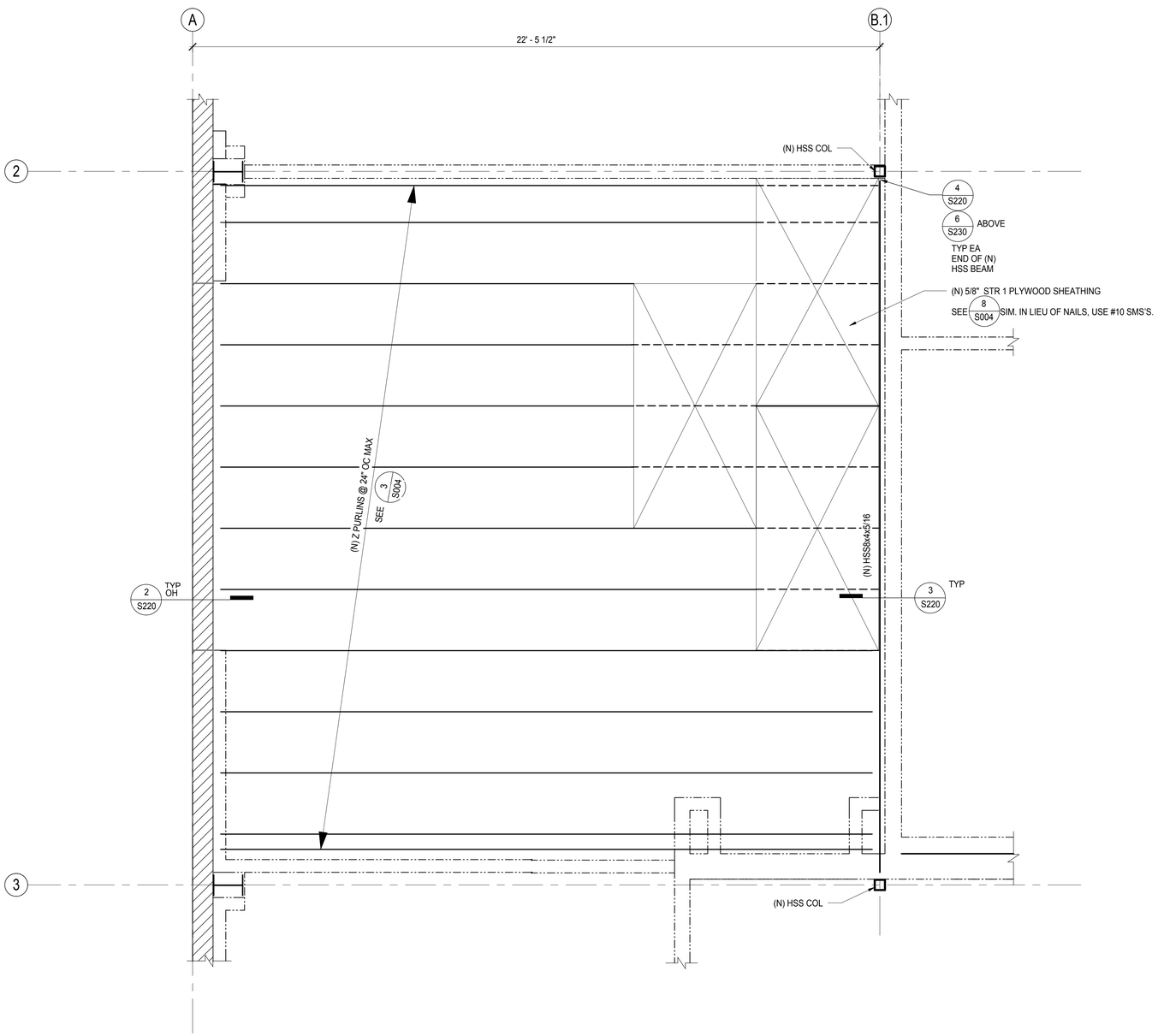

1 — PARTIAL CEILING PLATFORM FRAMING PLAN
1/2" = 1'-0"

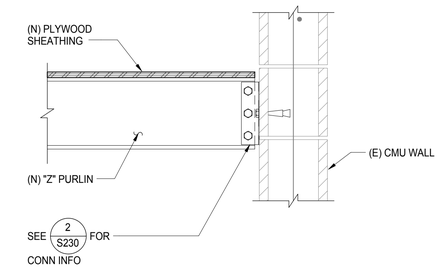

2 — PURLIN TO (E) CMU WALL
1 1/2" = 1'-0"

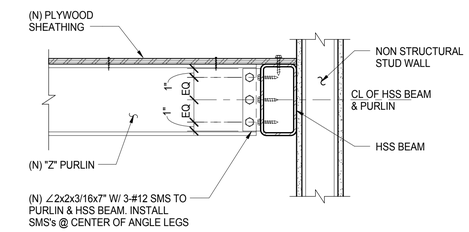

3 — PURLIN TO HSS BEAM
1 1/2" = 1'-0"

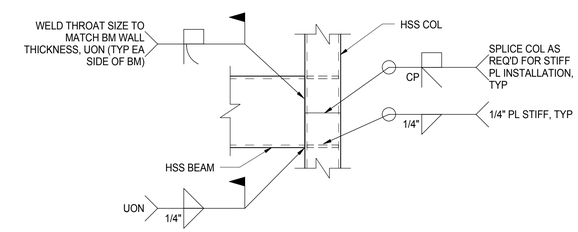

NOTE:
CONTRACTOR TO PROVIDE TEMPOARAY SUPPORTS OR ERECTION CONNECTIONS AS REQ'D DURING INSTALLATION, TYP.

4 — HSS TO HSS CONNECTION
1 1/2" = 1'-0"

KITCHELL
Capital Expenditure Managers
2750 Gateway Oaks Drive
Suite 300
Sacramento, CA. 95833
(916) 648-9700

BCAG BUTTE COUNTY ASSOCIATION OF GOVERNMENTS

BUTTE REGIONAL TRANSIT OPERATIONS CENTER
326 HUSS LANE, CHICO CA

BUTTE COUNTY ASSOCIATION OF GOVERNMENTS

PROJECT STATUS:

BID SET

BUILDINGS:

SHEET TITLE:

PARTIAL CEILING FRAMING PLAN & DETAILS

SCALE: 0 1/2 1 BAR IS ONE INCH ON ORIGINAL DRAWING. IF NOT ONE INCH ON THIS SHEET, ADJUST SCALES ACCORDINGLY

REVISIONS

No.	Description	Date

JOB NO. 5006A3

DATE 12/3/15

SHEET S220

LAST REVISION: 11/30/2015 2:00:40 PM

C:\BIM\BCAG TI_homberger.rvt

LEGEND:

- (E) 8" CMU WALL
- (N) 2x6 @ 16" OC STUD WALL, SEE 6/S003 UON
- INDICATES METAL DECK FLUTES (SPAN) DIRECTION
- (E) STUD WALL

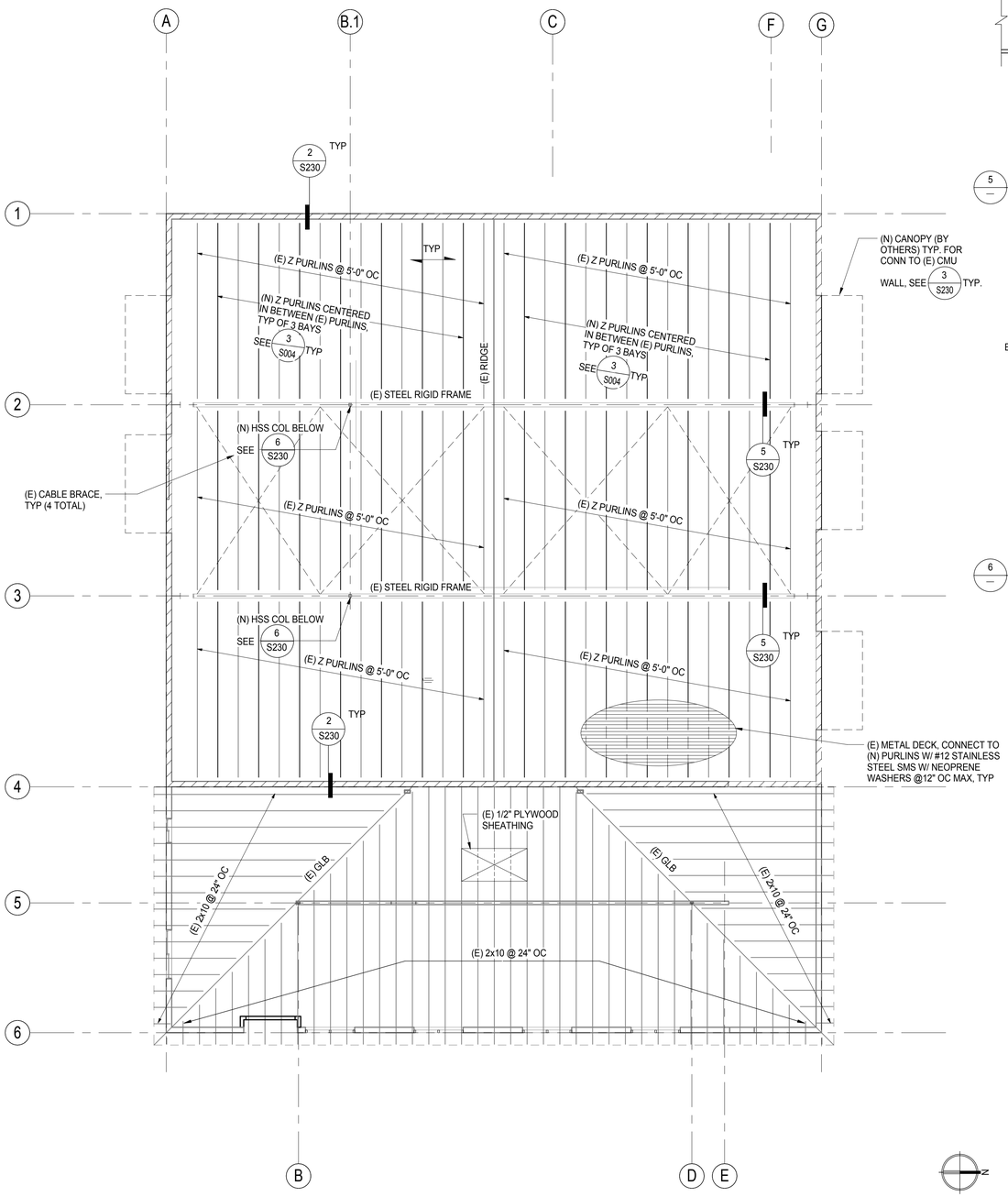

1 ROOF FRAMING PLAN
1/8" = 1'-0"

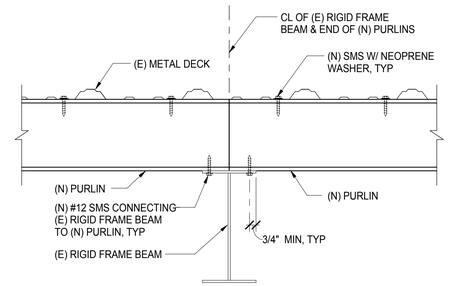

5 (N) PURLINS TO (E) RIGID FRAME BEAM
1 1/2" = 1'-0"

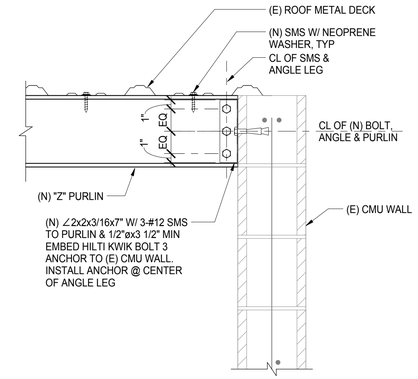

2 (N) PURLIN TO (E) CMU WALL
1 1/2" = 1'-0"

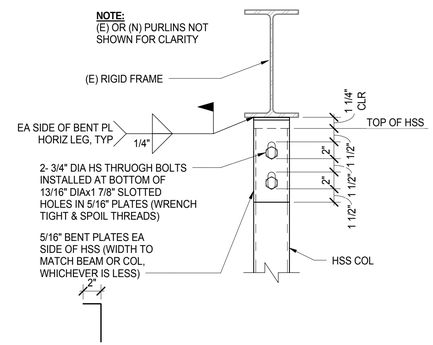

6 SLIP CONNECTION AT TOP OF HSS COL
1 1/2" = 1'-0"

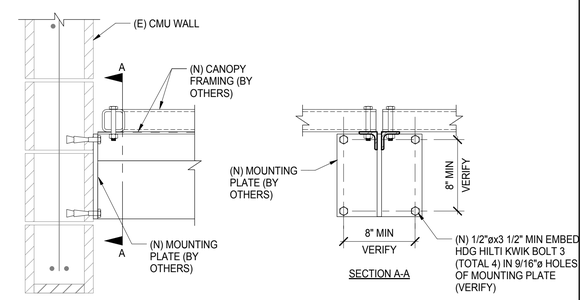

3 (N) CANOPY TO (E) CMU WALL
1 1/2" = 1'-0"

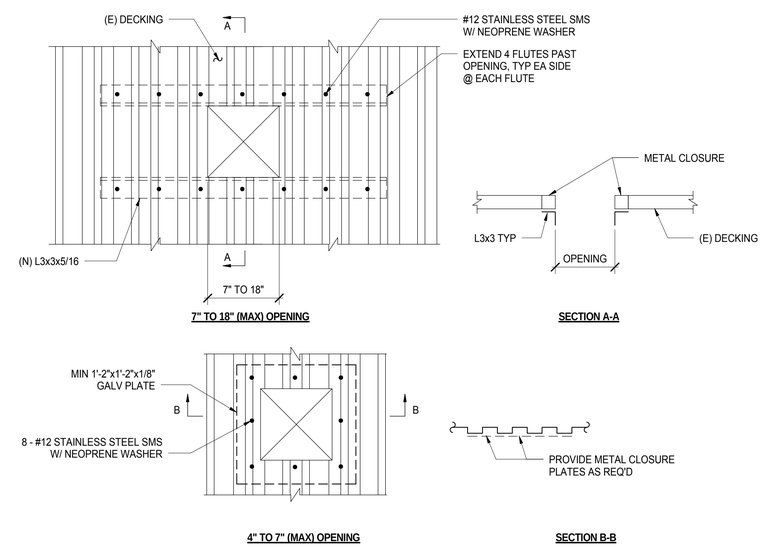

4 TYPICAL OPENING IN STEEL DECKING DETAIL
1" = 1'-0"

LAST REVISION: 11/30/2015 2:00:41 PM

KITCHELL
Capital Expenditure Managers
2750 Gateway Oaks Drive
Suite 300
Sacramento, CA. 95833
(916) 648-9700

BCAG BUTTE COUNTY ASSOCIATION OF GOVERNMENTS

BUTTE REGIONAL TRANSIT OPERATIONS CENTER
326 HUSS LANE, CHICO CA

BUTTE COUNTY ASSOCIATION OF GOVERNMENTS

PROJECT STATUS:
BID SET

BUILDINGS:

SHEET TITLE:
ROOF FRAMING PLAN & DETAILS

SCALE: 0 1/2 1 BAR IS ONE INCH ON ORIGINAL DRAWING. IF NOT ONE INCH ON THIS SHEET, ADJUST SCALES ACCORDINGLY

REVISIONS

No.	Description	Date

JOB NO. 5006A3
DATE 12/3/15
SHEET S230

C:\BIM\BCAG TI_hornberger.rvt

MECHANICAL ABBREVIATIONS

SYMBOL	DESCRIPTION
AB	ANCHOR BLOCK
ABC	ABOVE CEILING
AC	AIR CONDITIONING UNIT
ACC DR	ACCESS DOOR
ACC P	ACCESS PANEL
ACU	AIR CONDITIONING UNIT
AFF	ABOVE FINISHED FLOOR
AHU	AIR HANDLING UNIT
APD	AIR PRESSURE DROP, INCHES WATER COLUMN
APPROX	APPROXIMATE
ARCH	ARCHITECTURAL
ATTEN	ATTENUATORS
ATV	ACOUSTIC TURNING VANE
ABV	ABOVE
BD	BALANCE DAMPER
BDD	BACK DRAFT DAMPER
BFV	BUTTERFLY VALVE
BHP	BRAKE HORSE POWER
BLDG	BUILDING
BOD/P	BOTTOM OF DUCT/PIPE
BP	BID PACKAGE
BTUH	BRITISH THERMAL UNITS PER HOUR
CAP	CAPACITY
CBC	CALIFORNIA BUILDING CODE
CBV	CALIBRATED BALANCE VALVE
CD	CONDENSATE DRAIN
CEF	CEILING EXHAUST FAN
CFH	CUBIC FEET OF GAS PER HOUR
CFM,f	CUBIC FEET OF AIR FLOW PER MINUTE
CH	CHILLER
CHV	CHECK VALVE
CHWP	CHILLED WATER PUMP
CHWS/R	CHILLED WATER SUPPLY/RETURN
CLG	CEILING
CLR	CLEAR
CMC	CALIFORNIA MECHANICAL CODE
CONC	CONCRETE
COND	CONDENSER
CONN	CONNECT/CONNECTION
CONT	CONTINUATION
CONTR	CONTRACTOR
CT	COOLING TOWER
CU	CONDENSING UNIT
CVRH	CONSTANT AIR VOLUME CONTROLLER WITH REHEAT COIL
CWP	CONDENSER WATER PUMP
CWR	CONDENSER WATER RETURN
CWS	CONDENSER WATER SUPPLY
DGP	DATA GATHERING PANEL
DIA, ø	DIAMETER
DL	DOOR LOUVER
DN	DOWN
DPR	DAMPER
DTR	DOWN THROUGH ROOF
DWG	DRAWING
°F	DEGREES FAHRENHEIT

SYMBOL	DESCRIPTION
E	EXISTING
EA	EXHAUST AIR
EAD	EXHAUST AIR DAMPER
EC	EVAPORATIVE COOLER
EDB	ENTERING DRY BULB
EER	ENERGY EFFICIENCY RATING
EF	EXHAUST FAN
EL	ELEVATION
ELEC	ELECTRIC/ELECTRICAL
ENT	ENTERING
EQUIP	EQUIPMENT
ESP	EXTERNAL STATIC PRESSURE
EVAP	EVAPORATOR
EW	ENTERING WATER
EWB	ENTERING WET BULB
EWC	ELECTRIC WATER COOLER
EWT	ENTERING WATER TEMPERATURE
EXH	EXHAUST
FC	FLEXIBLE CONNECTION
FCU	FAN COIL UNIT
FCV	FLOW CONTROL VALVE
FD	FIRE DAMPER
FF	FLY FAN
FIN	FINISH
FLA	FULL LOAD AMPS
FLR	FLOOR
FO	FUEL OIL
FOR	FUEL OIL RETURN
FOS	FUEL OIL SUPPLY
FPM	FEET PER MINUTE
FRC	FIRING RANGE CLASSROOM
FSD	FIRE AND SMOKE DAMPER
FT 2	SQUARE FEET
FT (')	FOOT OR FEET
GA	GAUGE
GALV	GALVANIZED
GI	GALVANIZED IRON
GPH	GALLONS PER HOUR
GPM	GALLONS PER MINUTE
GX	GENERAL EXHAUST
HHWR	HEATING HOT WATER RETURN
HHWS	HEATING HOT WATER SUPPLY
HP	HORSE POWER
HTG	HEATING
HV	HAND VALVE
HW	HOT WATER
HWR	HOT WATER RETURN
HWS	HOT WATER SUPPLY
HX	HEAT EXCHANGER
HXP-#	HEAT EXCHANGER PUMP NUMBER
IE	INVERT ELEVATION
IN 2	SQUARE INCHES
IN, (")	INCH
IU	INDOOR UNIT FAN COIL
KEF	KITCHEN EXHAUST FAN
KW	KILOWATTS

SYMBOL	DESCRIPTION
LBS	POUNDS
LD	LOUVERED DOOR
LDB	LEAVING DRY BULB
LOD	LIMIT OF DEMOLITION
LRA	LOCKED ROTOR AMPS
LTCP	LOCAL TEMPERATURE CONTROL PANEL
LVR	LOUVER
LWB	LEAVING WET BULB
MAU	MAKE-UP AIR UNIT
MAV	MANUAL AIR VENT
MAX	MAXIMUM
MBH	THOUSAND BTUs PER HOUR
MCC	MOTOR CONTROL CENTER
MD	MOTORIZED
MECH	MECHANICAL
MFR	MANUFACTURER
MIN	MINIMUM
N	NEW
OA	OUTSIDE AIR
OAD	OUTSIDE AIR DAMPER
OC	ON CENTER
OD	OUTSIDE DIAMETER
OH	OVERHEAD
OU	OUTSIDE UNIT CONDENSOR
OV	OUTLET VELOCITY
PD	PRESSURE DROP
PRV	PRESSURE REGULATING VALVE PRESSURE REDUCING VALVE/
PSI (G) (A)	POUNDS PER SQUARE INCH (GAUGE) (ABSOLUTE)
RA	RETURN AIR
RAD	RETURN AIR DAMPER
REF	ROOF EXHAUST FAN
RF	RELIEF AIR
RPM	REVOLUTIONS PER MINUTE
RV	RELIEF VENTILATOR
S & R	SUPPLY AND RETURN
SA	SUPPLY AIR
SAD	SEE ARCHITECTURAL DRAWINGS
SB	SECURITY BARS
SD	SPLITTER DAMPER
SEC	SECTION
SF	SUPPLY FAN
SFM	STATE FIRE MARSHAL
SG	STEAM GENERATOR
SM	SHEET METAL
SOV	SHUT OFF VALVE
SP	STATIC PRESSURE
SPD	STATIC PRESSURE DROP
SQ FT	SQUARE FEET
SQ IN	SQUARE INCHES
SSTL	STAINLESS STEEL
STR	STRAINER
STRUCT	STRUCTURAL

SYMBOL	DESCRIPTION
TCP	TEMPERATURE CONTROL PANEL
TCV	TEMPERATURE CONTROL VALVE
TEMP	TEMPERATURE
TFH	THERMAL FLUID HEATER
TG	TRANSFER GRILLE
THK	THICK
TOD	TOP OF DUCT
TP	TOTAL PRESSURE
TSP	TOTAL STATIC PRESSURE
TX	TOILET EXHAUST
TYP	TYPICAL
UBC	UNIFORM BUILDING CODE
UCD	UNDERCUT DOOR
UF	UNDER FLOOR
UFC	UNIFORM FIRE CODE
UG	UNDER GROUND
UON	UNLESS OTHERWISE NOTED
UTR	UP THROUGH ROOF
V (VTR)	VENT (VENT THROUGH ROOF)
VAV	VARIABLE AIR VOLUME CONTROLLER
VD	VOLUME DAMPER
VLV	VALVE
VSD	VARIABLE SPEED DRIVE
VVRH	VARIABLE AIR VOLUME CONTROLLER WITH REHEAT COIL
WALL MTD (R)	WALL MOUNTED (RECESSED)
WB	WET BULB
WMS	WIRE MESH SCREEN
WOG	WATER OIL GAS
WP	WORKING PRESSURE
WPD	WATER PRESSURE DROP (IN FEET OF WATER COLUMN)
WT	WEIGHT
Z	ZONE DAMPER

MECHANICAL SYMBOLS

SYMBOL	DESCRIPTION
12/8 S	SUPPLY
12/8 R	RETURN
12/8 E	EXHAUST
	RECTANGULAR DUCT WITH DIMENSIONS SHOWN IN INCHES WIDTH/HEIGHT (SYSTEM)
12/8 R	DUCT WITH INTERNAL ACOUSTICAL INSULATION
12/8 R	DUCT ENCLOSURE IN GYPSUM BOARD FOR 2 HOUR RATING
12ø R	ROUND DUCT WITH DIAMETER SHOWN IN INCHES
	FLEXIBLE DUCT
W R	R/W=1.5 ROUND DUCT SIMILAR TO RECTANGULAR (R/D=1.5)
	ACOUSTIC TURNING VANES

VANE ANGLE	DUCT TURN
20 - 24°	12" DEFLECTION
30 - 39°	30" DEFLECTION
40 - 39°	AIR TURN

SYMBOL	DESCRIPTION
	DUCT TRANSITION
	RECTANGULAR TO ROUND DUCT TRANSITION
VD	VOLUME DAMPER
M	MOTORIZED DAMPER
F	FIRE DAMPER
FS	FIRE & SMOKE DAMPER

RECTANGULAR DUCT SECTIONS

SYMBOL	DESCRIPTION
	SUPPLY
	RETURN
	EXHAUST

ROUND DUCT SECTIONS

SYMBOL	DESCRIPTION
	SUPPLY
	RETURN
	EXHAUST
	FLUE

HYDRONIC SYMBOLS

SYMBOL	DESCRIPTION
	CONDENSATE DRAIN
	REFRIGERANT LIQUID PIPING

DESCRIPTION	SYMBOL	DESCRIPTION
SUPPLY GRILL	6X6 CDL / 200 S	DIFF NECK SIZE/DIFF TYPE / CFM / SYSTEM
RETURN GRILL		
EXHAUST GRILL		
SIDE WALL SUPPLY GRILL	12x8 S	WIDTHxHEIGHT (SYSTEM)
SIDE WALL RETURN GRILL		
EQUIPMENT TAG (PLANS)	FC3 / 4	EQUIPMENT TYPE / EQUIPMENT NUMBER
EQUIPMENT TAG (SCHEDULES & DIAGRAMS)	FC3-4	EQUIPMENT TYPE - NUMBER
FAN SWITCH	$	MOUNTED 48" ABOVE FINISHED FLOOR
THERMOSTAT	T XX	DENOTES EQUIPMENT CONTROLLED
TEMPERATURE SENSOR	S XX	DENOTES EQUIPMENT CONTROLLED
CO2 SENSOR	C XX	DENOTES EQUIPMENT CONTROLLED
DUCT MOUNTED SMOKE DETECTOR	D	
POINT OF CONNECTION		
POINT OF DISCONNECT		
MATCH LINE	1 / M101A / 1 / M101B	VIEW NUMBER / SHEET NUMBER; SHADED PORTION IS SIDE CONSIDERED
VIEW REFERENCE	1 / XXXX	VIEW NUMBER / SHEET NUMBER
SECTION	X / XXXX	SECTION IDENTIFIER / SHEET NUMBER

GENERAL NOTES:

1. ALL WORKS SHALL COMPLY WITH ALL APPLICABLE STATE CODES, SPECIFICATIONS AND INDUSTRY STANDARDS.
2. SEISMIC RESTRAINT : ALL HUNG PIPING AND DUCTWORK SHALL CONFORM TO THE FOLLOWING CONDITIONS AND, THEREFORE, SEISMIC RESTRAINT MAY BE OMITTED ACCORDING TO SECTION ASCE 7-10 OF THE 2013 CBC:
   a. FUEL PIPING 1" AND LARGER AND ALL OTHER PIPING 2- 1/2" AND LARGER MUST BE SUSPENDED BY INDIVIDUAL HANGERS 12" OR LESS IN LENGTH FROM THE TOP OF PIPE TO THE BOTTOM OF THE ATTACHMENT TO STRUCTURE.
   b. NO TRAPEZE ASSEMBLIES SHALL BE USED TO SUPPORT PIPES OF DUCTS.
   c. ALL RECTANGULAR DUCTS SHALL BE LESS THAT 6 SQ. FT. IN CROSS SECTIONAL AREA AND ALL ROUND DUCTS SHALL BE LESS THAN 28".
   d. WHERE LATERAL RESTRAINTS ARE OMITTED, PIPING AND DUCTS SHALL BE INSTALLED SUCH THAT LATERAL MOTION OF THE PIPING OR DUCT WILL NOT CAUSE DAMAGING IMPACT WITH OTHER SYSTEMS OR STRUCTURAL MEMBERS, OR LOSS OF VERTICAL SUPPORT. IF AT THE CONTRACTOR'S OPTION, DUCTWORK AND PIPING IS NOT INSTALLED IN CONFORMANCE WITH THESE CONDITIONS, THE CONTRACTOR SHALL SUBMIT SHOP DRAWINGS (1/4" = 1'-0" SCALE) OF SEISMIC BRACING SYSTEM IN ACCORDANCE WITH "MASON INDUSTRIES' SEISMIC RESTRAINTS GUIDELINES FOR SUSPENDING PIPING AND DUCTWORK (OR APPROVED EQUAL) TO THE ARCHITECT FOR APPROVAL.
3. ALL INSULATION AND DUCT SEALING PRODUCTS USED IN THE BUILDING SHALL HAVE A SURFACE BURNING CHARACTERISTIC WITH FLAME SPREAD/SMOKE DEVELOPED INDEX OF 25/50 MAXIMUM, WHEN TESTED AS COMPOSITE INSTALLATION INCLUDING INSULATION, TAPES FACING MATERIALS, JACKETS AND ADHESIVES.
4. THE ANNULAR SPACE BETWEEN PIPE SLEEVES AND THE PIPE THROUGH ALL RATED WALLS AND FLOORS SHALL BE FIRESTOPPED. FIRESTOPPING OF ALL PIPE PENETRATIONS SHALL COMPLY WITH UL REQUIREMENTS. MANUFACTURING PREAPPROVED UL PENETRATIONS FOR PIPE MATERIAL AND SURFACE PENETRATED SHALL BE USED. PENETRATIONS SHALL BE 3M, PROSET, OR APPROVED EQUAL. SUBMIT SHOP DRAWINGS.
5. PROVIDE MANUAL AIR DAMPERS AT ALL DUCT BRANCH TAKEOFFS TO A SINGLE OUTLET OR INLET.
6. COORDINATE WITH ARCHITECTURAL REFLECTED CEILING PLAN FOR THE EXACT LOCATION OF ALL CEILING DIFFUSERS AND GRILLES.
7. COORDINATE THE FOLLOWING WITH ARCHITECTURAL, STRUCTURAL, PLUMBING AND ELECTRICAL DRAWING AND ELEMENTS AS INSTALLED, INCLUDING EXISTING BUILDING SYSTEMS.
   a. EXACT LOCATION OF ALL EQUIPMENT.
   b. ALL PENETRATION THRU ROOF, WALLS AND FLOORS.
   c. EXACT SIZE AND ROUTING OF DUCTWORK AND PIPING.
8. THE CONTRACTOR SHALL SURVEY EXISTING FIELD CONDITIONS PRIOR TO BIDDINGS. IF AWARDED THE CONTRACT, THE CONTRACTOR SHALL SURVEY EXISTING FIELD CONDITIONS IN DETAIL AND COORDINATE THE WORK WITH EXISTING BUILDING SYSTEMS.
9. ALL MANUAL AIR DAMPERS AND OTHER DEVICES REQUIRING ACCESS FOR OPERATION OR MAINTENANCE SHALL BE PROVIDED WITH ACCESS DOORS OF ADEQUATE SIZE FOR SERVICE.
10. ALL DUCT SHOWN ON PLAN ARE EXTERIOR SIZES.
11. ANY DAMAGE TO EXISTING BUILDING ARCHITECTURAL, STRUCTURAL, MECHANICAL, AND ELECTRICAL SYSTEMS THAT OCCURS DURING THE WORK SHALL BE RESTORED TO THE ORIGINAL CONDITION AT THE CONTRACTOR'S EXPENSE. IF LANDSCAPED AREAS MUST BE USED FOR BUILDING ACCESS, THE LANDSCAPING SHALL BE RETURNED TO ITS ORIGINAL CONDITION. THE CONTRACTOR SHALL INCLUDE COSTS IN THE BID FOR THIS WORK IF THIS APPROACH IS USED. THE OWNER WILL NOT PAY ANY ADDITIONAL COSTS TO COVER DAMAGE TO THE BUILDING SYSTEMS, LANDSCAPING OR DRIVE AREAS.
12. ALL PIPING LOCATED IN WALLS OR ABOVE CEILING HAVING SHUTOFF VALVES OR OTHER DEVICES REQUIRING ACCESS FOR OPERATION OR MAINTENANCE SHALL BE PROVIDED WITH ACCESS DOORS OF ADEQUATE SIZE FOR SERVICE.
13. ALL EXISTING SUPPLY AND RETURN AIR PLENUMS BELOW THE HVAC UNITS SHALL BE CLEANED AND INSPECTED AFTER REMOVAL OF EXISTING HVAC UNITS. EXISTING DUCT LINER WITHIN THESE PLENUMS SHALL BE REPLACED WITH NEW LINDER, AND UNUSUAL CONDITIONS DISCOVERED SHALL BE BROUGHT TO ARCHITECTS AND THE ENGINEERS ATTENTION IMMEDIATELY.
14. ALL EQUIPMENT REMOVED FROM THE SITE BY THE CONTRACTOR SHALL BE DISPOSED OF IN ACCORDANCE WITH ALL APPLICABLE CODES AND LAWS, REFRIGERANTS CONTAINED WITHIN HVAC UNITS SHALL BE RECLAIMED AND DISPOSED OF IN ACCORDANCE WITH ALL APPLICABLE CODES, REGULATIONS AND LAWS.
15. AIR BALANCE: CONTRACTOR SHALL PERFORM AN AIR BALANCE OF THE BUILDING MECHANICAL SYSTEMS INCLUDING THE FOLLOWING:
   a. MEASURE, ADJUST AND RECORD AIR FLOWS FOR ALL NEW AC UNITS.
   b. PERFORM A COMPLETE BALANCE OF ALL AREAS AFFECTED BY THE WORK. BALANCE TO AIR FLOWS SHOWN ON MECHANICAL PLANS.
   c. RETURN IN OPPOSITE SEASON (6 Mos. FROM WORK COMPLETION) TO MAKE ADJUSTMENT AS REQUIRED TO COMPLETE BALANCE.
   d. AIR BALANCING SHALL CONFORM TO AABC OR NEBB STANDARDS. SEE SPECIFICATIONS FOR DETAILED AIR BALANCE REQUIREMENTS.
16. HVAC CONTROLS: NEW HVAC CONTROLS ARE INCLUDED IN THE SCOPE OF WORK. SEE SHEET M802 AND SPECIFICATIONS FOR DETAILED REQUIREMENTS. NEW CONTROLS ARE REQUIRED ON ALL NEW AC UNIT. NEW ZONE TEMPERATURE SENSORS ARE REQUIRED.

LAST REVISION: 11/30/2015 2:00:08 PM

KITCHELL
Capital Expenditure Managers
2750 Gateway Oaks Drive
Suite 300
Sacramento, CA. 95833
(916) 648-9700

BCAG BUTTE COUNTY ASSOCIATION OF GOVERNMENTS

BUTTE REGIONAL TRANSIT OPERATIONS CENTER
326 HUSS LANE, CHICO CA

BUTTE COUNTY ASSOCIATION OF GOVERNMENTS

PROJECT STATUS:
BID SET
BUILDINGS:

SHEET TITLE:
MECHANICAL ABBREVIATIONS, SYMBOLS, & NOTES

SCALE: 0 1/2 1 BAR IS ONE INCH ON ORIGINAL DRAWING. IF NOT ONE INCH ON THIS SHEET, ADJUST SCALES ACCORDINGLY

REVISIONS

No.	Description	Date

JOB NO. 5006A3
DATE 12/3/15
SHEET M001

C:\BIM\BCAG TI_hornberger.rvt

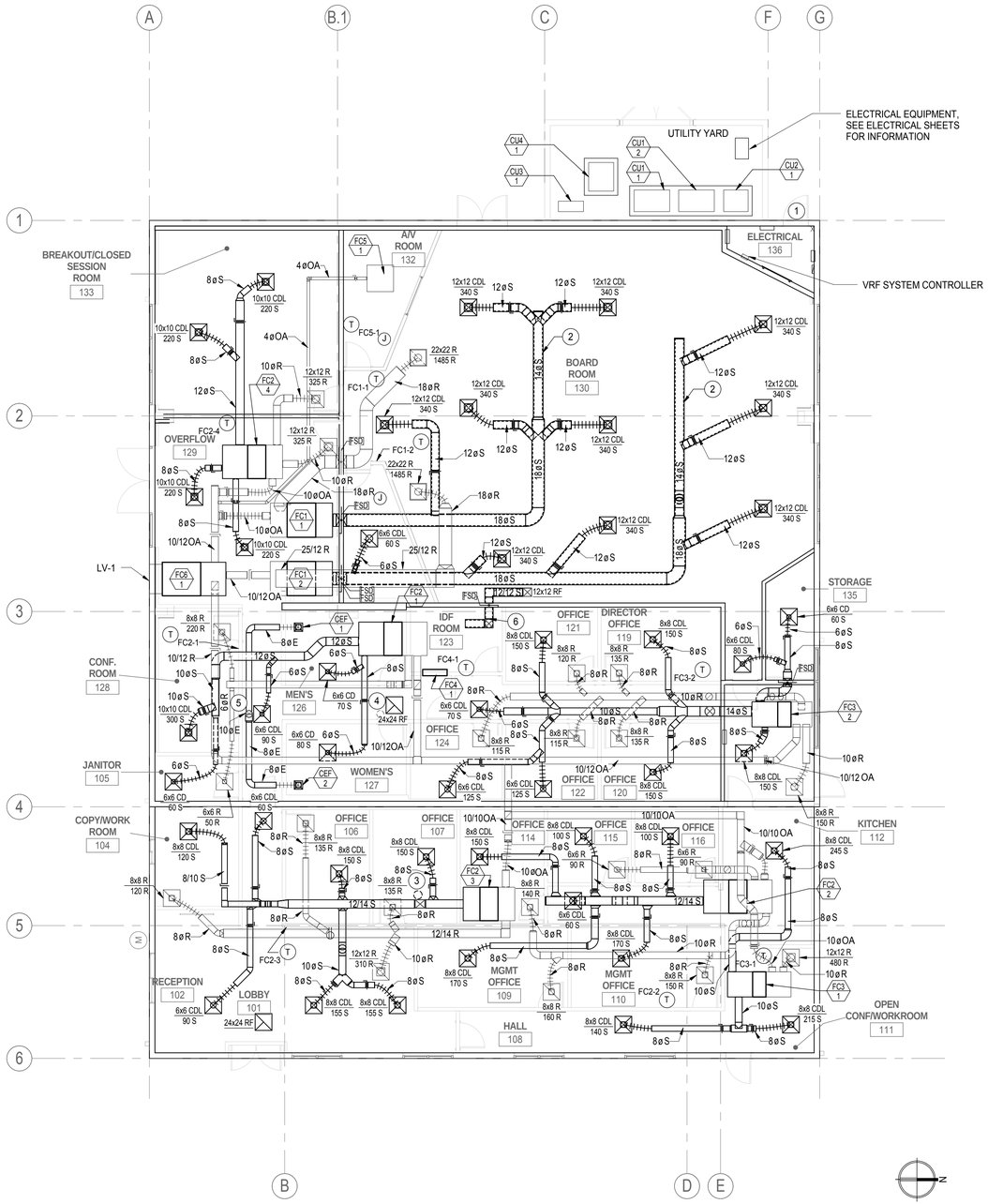

1 MECHANICAL FLOOR PLAN
1/8" = 1'-0"

GENERAL NOTES:

1. DESIGN DRAWINGS ARE DIAGRAMMATIC AND DO NOT SHOW ALL OFFSETS, BENDS, ELBOWS AND OTHER ELEMENTS THAT MAY BE REQUIRED. THE DRAWINGS SHOW THE GENERAL ARRANGEMENT OF EQUIPMENT, DUCTWORK, ETC. AND SHALL BE FOLLOWED AS CLOSELY TO THE ACTUAL BUILDING CONSTRUCTION AND THE WORK FROM OTHER TRADES SHALL PERMIT. CONTRACTOR WILL PROVIDE ALL NECESSARY ACCESSORIES REQUIRED FOR A COMPLETE INSTALLATION.
2. MOUNT THERMOSTATS AT 48" AFF.

(#) **KEYNOTES**

1 PROVIDE DOOR LOUVER WITH AT LEAST 196IN SQUARED FREE OPENING.
2 ACOUSTICAL LINED SUPPLY DUCTWORK IN BOARDROOM, TYP.
3 QTY (1) ONE 8" RELIEF AIR HOOD, SEE RELIEF HOOD SCHEDULE ON SHEET M801. COORDINATE ROOF PENETRATION WITH ARCH., SEE SHEET A230.
4 QTY (1) ONE 12" RELIEF AIR HOOD, SEE RELIEF HOOD SCHEDULE ON SHEET M801. COORDINATE ROOF PENETRATION WITH ARCH., SEE SHEET A230.
5 QTY (1) ONE 10" EXHAUST AIR HOOD, SEE EXHAUST HOOD SCHEDULE ON SHEET M801. COORDINATE ROOF PENETRATION WITH ARCH., SEE SHEET A230.
6 ACOUSTICAL LINED RELIEF AIR DUCT. TERMINATE IN PLENUM ABOVE IDF ROOM 123 CEILING.

KITCHELL
Capital Expenditure Managers
2750 Gateway Oaks Drive
Suite 300
Sacramento, CA. 95833
(916) 648-9700

BCAG BUTTE COUNTY ASSOCIATION OF GOVERNMENTS

BUTTE REGIONAL TRANSIT OPERATIONS CENTER
326 HUSS LANE, CHICO CA

BUTTE COUNTY ASSOCIATION OF GOVERNMENTS

PROJECT STATUS:
BID SET
BUILDINGS:

SHEET TITLE:
MECHANICAL PLAN

SCALE: 0 1/2 1 — BAR IS ONE INCH ON ORIGINAL DRAWING. IF NOT ONE INCH ON THIS SHEET, ADJUST SCALES ACCORDINGLY

REVISIONS

No.	Description	Date

JOB NO. 5006A3
DATE 12/3/15
SHEET M201

LAST REVISION: 11/30/2015 2:00:12 PM

C:\BIM\BCAG TI_hornberger.rvt

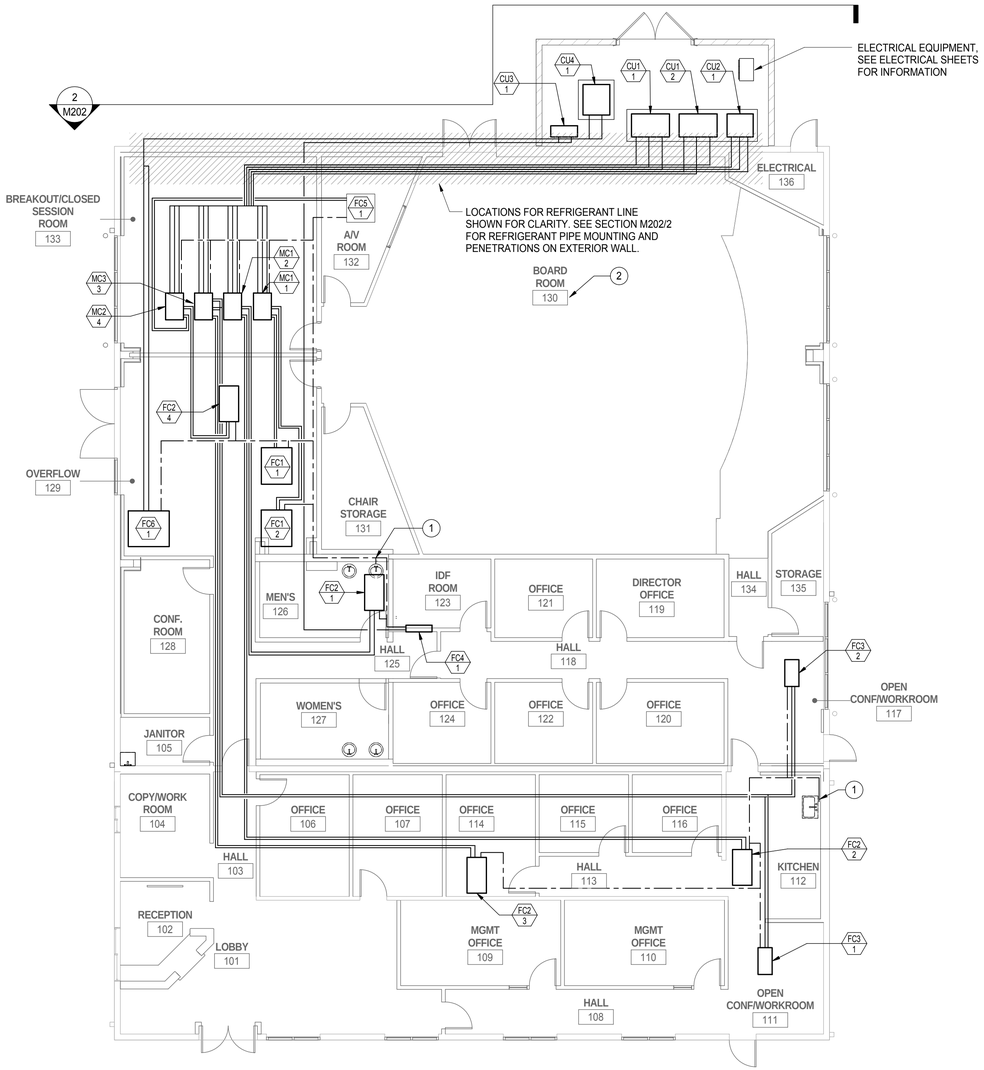

1 REFRIGERANT & CONDENSATE PLAN
1/8" = 1'-0"

GENERAL NOTES:

1. SELECT THE REFRIGERANT LINE SIZES BASED ON THE MANUFACTURER'S RECOMMENDATION. INSULATE REFRIGERANT PIPING AND SUCTION LINES. THE DEVELOPED LENGTH OF THE REFRIGERANT PIPING SHALL NOT EXCEED THE MANUFACTURER'S REQUIREMENT.
2. FOR REFRIGERANT PIPE MOUNTING, SEE DETAIL 1/M702.
3. FOR CONDENSATE PIPE MOUNTING, SEE DETAIL 1/M702.
4. PROVIDE SUPPORT FOR CONDENSATE DRAIN PIPING MAX 10' ON CENTER.
5. CONNECT CONDENSATE DRAIN TO EQUIPMENT WITH UNION AND P-TRAP. SLOPE CONDENSATE DRAIN PIPING AT 1/8" PER FOOT.
6. DESIGN DRAWINGS ARE DIAGRAMMATIC AND DO NOT SHOW ALL OFFSETS, BENDS, ELBOWS AND OTHER ELEMENTS THAT MAY BE REQUIRED. THE DRAWINGS SHOW THE GENERAL ARRANGEMENT OF EQUIPMENT, REFRIGERANT LINES, ETC. AND SHALL BE FOLLOWED AS CLOSELY TO THE ACTUAL BUILDING CONSTRUCTION AND THE WORK FROM OTHER TRADES SHALL PERMIT. CONTRACTOR WILL PROVIDE ALL NECESSARY ACCESSORIES REQUIRED FOR A COMPLETE INSTALLATION.

 # KEYNOTES

1 CONNECT CONDENSATE DRAIN PIPE TO TAILPIECE OF LAVATORY'S DRAIN, TYPICAL.
2 AVOID INSTALLING ANY REFRIGERANT LINES IN BOARD ROOM WALLS OR ABOVE CEILING.
3 PROVIDE REFRIGERANT EXTERIOR PIPE INSULATION WITH METAL JACKET.
4 PIPE WALL PENETRATION SHALL BE TWO TIMES DIAMETERS APART, TYP. AVOID CUTTING REBAR REINFORCEMENT. PROVIDE EXTERIOR SEALANT WITH ESCUTCHEON PLATES ON BOTH SIDES.

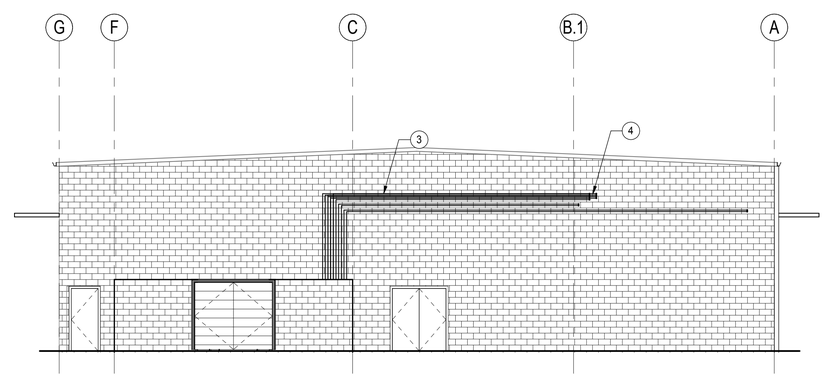

2 EXTERIOR WALL ELEVATION - REFRIGERANT PIPING
1/8" = 1'-0"

KITCHELL
Capital Expenditure Managers
2750 Gateway Oaks Drive
Suite 300
Sacramento, CA. 95833
(916) 648-9700

BCAG BUTTE COUNTY ASSOCIATION OF GOVERNMENTS

BUTTE REGIONAL TRANSIT OPERATIONS CENTER
326 HUSS LANE, CHICO CA

BUTTE COUNTY ASSOCIATION OF GOVERNMENTS

PROJECT STATUS:
BID SET
BUILDINGS:

SHEET TITLE:
MECHANICAL REFRIGERANT & CONDENSATE PLAN

SCALE: 0 1/2 1 BAR IS ONE INCH ON ORIGINAL DRAWING. IF NOT ONE INCH ON THIS SHEET, ADJUST SCALES ACCORDINGLY

REVISIONS

No.	Description	Date

JOB NO. 5006A3
DATE 12/3/15
SHEET M202

LAST REVISION: 11/30/2015 2:00:13 PM

C:\BIM\BCAG TI_hornberger.rvt

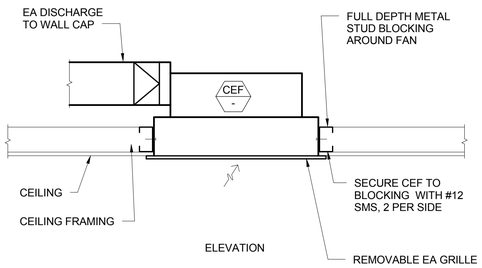

6 CEILING EXHAUST FAN MOUNTING DETAIL
NTS

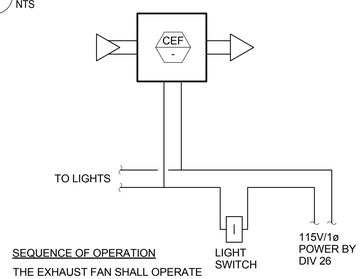

SEQUENCE OF OPERATION

THE EXHAUST FAN SHALL OPERATE WHENEVER THE LIGHTS IN THE RESTROOM ARE ON.

7 CEF CONTROL DIAGRAM
NTS

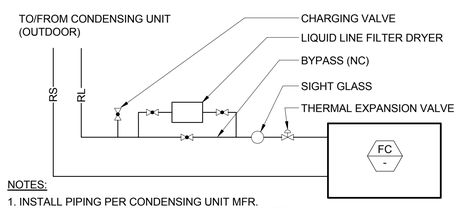

NOTES:

1. INSTALL PIPING PER CONDENSING UNIT MFR. RECOMMENDATIONS FOR SLOPING, TRAPPING, ETC.
2. SEE SCHEDULES FOR RS AND RL SIZES.

8 REFRIGERANT PIPING DIAGRAM
NTS

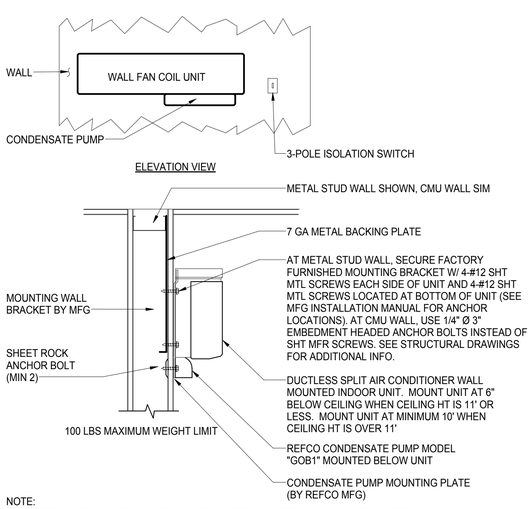

NOTE:
REFRIGERANT PIPING, DRAIN TUBING, AND POWER CONNECTIONS SHALL BE ROUTED IN STUD WALL SPACE INTO UNIT. NO EXPOSED PIPING, TUBING OR WIRING ON WALL.

9 WALL MOUNT FAN COIL UNIT
NTS

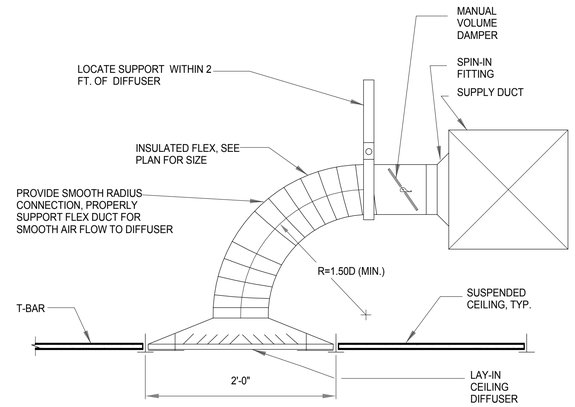

3 T-BAR CEILING SUPPLY DIFFUSER
1" = 1'-0"

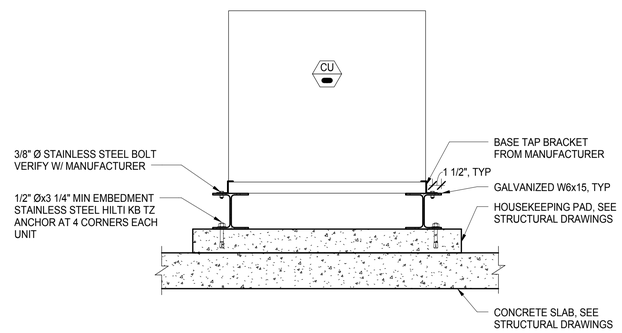

4 CONDENSING UNIT ON CONCRETE PAD
NTS

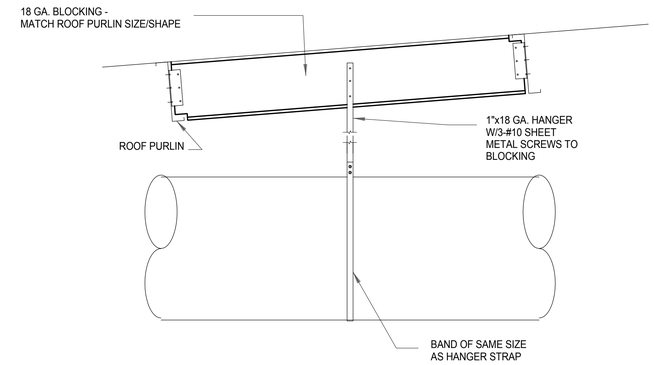

DUCT PERPENDICULAR TO PURLINS

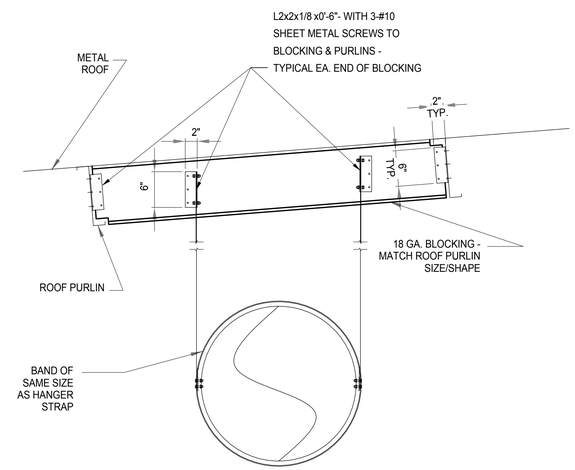

DUCT PARALLEL TO PURLINS

NOTES:

1. ATTACH DUCTWORK PER SMACNA GUIDELINES.
2. CUT BLOCKING AS REQ'D TO FIT.
3. HANGER SPACING =10'-0" MAX.
4. MAX. WEIGHT = 200#.
5. PROVIDE SWAY AND SEISMIC BRACING PER SMACNA SEISMIC GUIDELINES.

1 DUCT HANGING DETAIL- METAL PURLINS
1" = 1'-0"

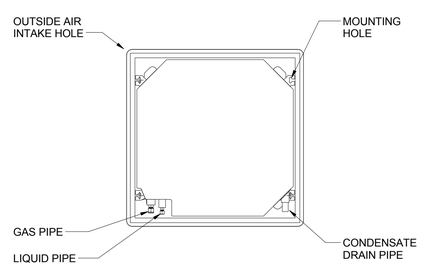

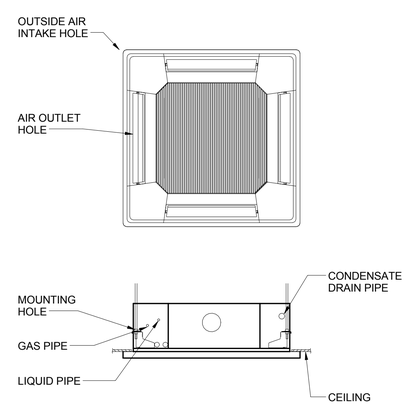

5 CEILING CASSETTE MOUNTING DETAIL
NTS

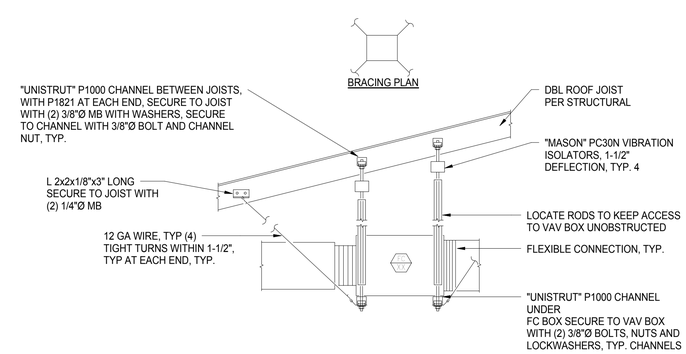

2 FC UNIT MOUNTING DETAIL - METAL PURLINS
1" = 1'-0"

KITCHELL
Capital Expenditure Managers
2750 Gateway Oaks Drive
Suite 300
Sacramento, CA. 95833
(916) 648-9700

BCAG BUTTE COUNTY ASSOCIATION OF GOVERNMENTS

BUTTE REGIONAL TRANSIT OPERATIONS CENTER
326 HUSS LANE, CHICO CA

BUTTE COUNTY ASSOCIATION OF GOVERNMENTS

PROJECT STATUS:
BID SET

BUILDINGS:

SHEET TITLE:
MECHANICAL DETAILS

SCALE: 0 1/2 1 — BAR IS ONE INCH ON ORIGINAL DRAWING. IF NOT ONE INCH ON THIS SHEET, ADJUST SCALES ACCORDINGLY

REVISIONS

No.	Description	Date

JOB NO. 5006A3
DATE 12/3/15
SHEET M701

C:\BIM\BCAG TI_hornberger.rvt

LAST REVISION: 11/30/2015 2:00:15 PM

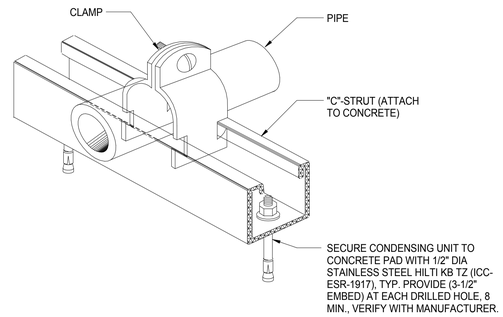

4 — PIPE SUPPORT DETAIL AT CONCRETE FLOOR
NTS

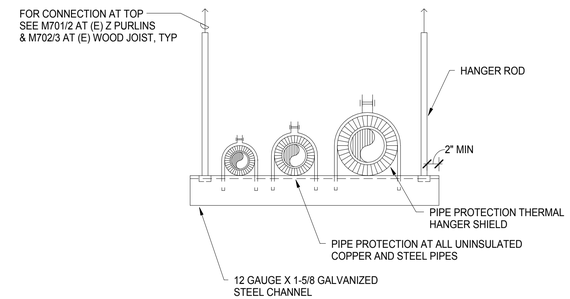

1 — TRAPEZE PIPE HANGER DETAIL
NTS

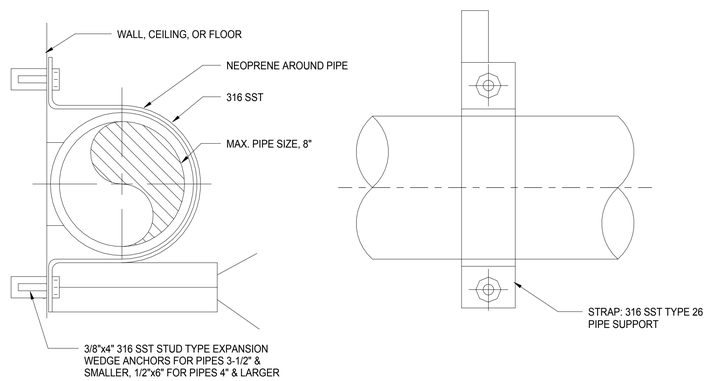

5 — PIPE SUPPORT DETAIL AT WALL
3" = 1'-0"

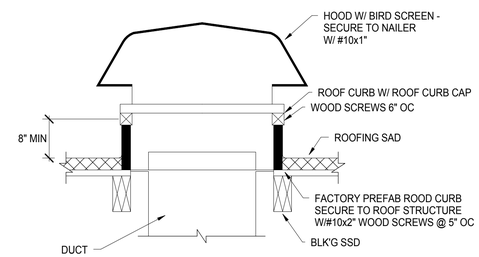

NOTE:
COORDINATE ROOF CURB WITH ARCHITECTURAL AND STRUCTURAL DRAWINGS.

2 — INTAKE HOOD MOUNTING DETAIL
NTS

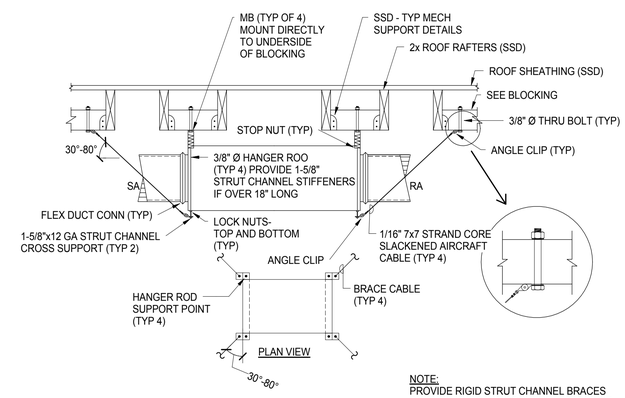

NOTE:
PROVIDE RIGID STRUT CHANNEL BRACES ON TWO ADJACENT CORNERS INSTEAD OF CABLES WHERE UNIT IS INSTALLED NEXT TO WALL.

3 — FAN COIL UNIT DETAIL - WOOD JOIST
3/4" = 1'-0"

KITCHELL
Capital Expenditure Managers
2750 Gateway Oaks Drive
Suite 300
Sacramento, CA. 95833
(916) 648-9700

BCAG BUTTE COUNTY ASSOCIATION OF GOVERNMENTS

BUTTE REGIONAL TRANSIT OPERATIONS CENTER
326 HUSS LANE, CHICO CA

BUTTE COUNTY ASSOCIATION OF GOVERNMENTS

PROJECT STATUS:
BID SET
BUILDINGS:

SHEET TITLE:
MECHANICAL DETAILS

SCALE: 0 1/2 1 BAR IS ONE INCH ON ORIGINAL DRAWING. IF NOT ONE INCH ON THIS SHEET, ADJUST SCALES ACCORDINGLY

REVISIONS

No.	Description	Date

JOB NO. 5006A3
DATE 12/3/15
SHEET M702

C:\BIM\BCAG TI_hornberger.rvt

LAST REVISION: 11/30/2015 2:00:16 PM

TRANE VRF INDOOR UNIT SCHEDULE

UNIT TAG	LOCATION	DIMENSIONS	'TRANE' MODEL NUMBER	TYPE	REMOTE SENSOR	NOMINAL COOLING CAPACITY (BTU/H)	NOMINAL HEATING CAPACITY (BTU/H)	COOLING DESIGN ENTERING TEMP DB/WB (°F)	HEATING DESIGN ENTERING TEMP DB/WB (°F)	PEAK FAN AIRFLOW (CFM)	OUTSIDE AIR REQ. (CFM)	VOLTAGE / PHASE	ELECTRICAL MCA/MOP	WEIGHT (LBS)	NOTES / OPTIONS
FC1-1	OVERFLOW ROOM 129	49"W x 19" H x 26"D	4TVA0076B100NB	CEILING CONCEALED TYPE (DUCTED)	WIRED SENSOR	76800	85200	80.0/67.0	70.0	1920	320	208/230V/1-PHASE	530 W	200	1, 2, 3, 4, 5, 6, 8
FC1-2	OVERFLOW ROOM 129	49"W x 19" H x 26"D	4TVA0076B100NB	CEILING CONCEALED TYPE (DUCTED)	WIRED SENSOR	76800	85200	80.0/67.0	70.0	1920	310	208/230V/1-PHASE	530 W	200	1, 2, 3, 4, 5, 6, 8
FC2-1	MENS RESTROOM 126	48"W x 15" H x 26"D	4TVA0036B100NB	CEILING CONCEALED TYPE (DUCTED)	WIRED SENSOR	36000	40000	80.0/67.0	70.0	550	100	208/230V/1-PHASE	210 W	140	1, 2, 3, 4, 5, 6, 8
FC2-2	KITCHEN ROOM 112	48"W x 15" H x 26"D	4TVA0036B100NB	CEILING CONCEALED TYPE (DUCTED)	WIRED SENSOR	36000	40000	80.0/67.0	70.0	750	90	208/230V/1-PHASE	210 W	140	1, 2, 3, 4, 5, 6, 8
FC2-3	OFFICE ROOM 114	48"W x 15" H x 26"D	4TVA0036B100NB	CEILING CONCEALED TYPE (DUCTED)	WIRED SENSOR	36000	40000	80.0/67.0	70.0	870	180	208/230V/1-PHASE	210 W	140	1, 2, 3, 4, 5, 6, 8
FC2-4	OVERFLOW ROOM 129	48"W x 15" H x 26"D	4TVA0036B100NB	CEILING CONCEALED TYPE (DUCTED)	WIRED SENSOR	36000	40000	80.0/67.0	70.0	880	230	208/230V/1-PHASE	210 W	140	1, 2, 3, 4, 5, 6, 8
FC3-1	OPEN CONF/WORKROOM 111	36"W x 11" H x 19"D	4TVD0024B100NB	CEILING CONCEALED TYPE (DUCTED)	WIRED SENSOR	24000	27000	80.0/67.0	70.0	410	120	208/230V/1-PHASE	220 W	70	1, 2, 3, 4, 5, 6, 8
FC3-2	OPEN CONF/WORKROOM 117	36"W x 11" H x 19"D	4TVD0024B100NB	CEILING CONCEALED TYPE (DUCTED)	WIRED SENSOR	24000	27000	80.0/67.0	70.0	890	90	208/230V/1-PHASE	220 W	70	1, 2, 3, 4, 5, 6, 8
FC4-1	SERVER ROOM 123	35"W x 12"H x 9"D	4MYW6518A10NOVBA	WALL MOUNTING TYPE	WIRELESS REMOTE	21000	0	95°F DB	NA	470	0	POWERED FROM OUTDOOR UNIT (CU3-1)	15/25 A	35	3
FC5-1	AV ROOM 132	37.5"W x 10"H x 37.5"D	4TVD0018B100NB	CEILING CASSETTE (4-WAY AIRFLOW) TYPE	WIRED SENSOR	18000	20000	80.0/67.0	70.0	495	15	208/230V/1-PHASE	32 W	60	1, 2, 3, 4, 5, 6, 7

NOTES & OPTIONS:
1. NOMINAL COOLING CAPACITIES ARE BASED ON INDOOR COIL EAT OF 80/67°F (DB/WB), OUTDOOR OF 95°F (DB).
2. NOMINAL HEATING CAPACITIES ARE BASED ON INDOOR COIL EAT OF 70°F (DB), OUTDOOR OF 43°F (WB).
3. SEE OUTDOOR UNIT SCHEDULE FOR OUTDOOR AMBIENT CONDITIONS, CONNECTED CAPACITY, AND OTHER FACTORS ASSOCIATED WITH CORRECTED CAPACITIES.
4. SEE SCHEMATIC PIPING/CONTROL DIAGRAM FOR INDICATION OF REQUIRED INDOOR UNIT REMOTE CONTROLLERS, SYSTEM CONTROLLERS, AND INTEGRATION DEVICES.
5. FULL DEMAND CORRECTED CAPACITY INCLUDES DE-RATE ASSOCIATED WITH INDOOR VS. OUTDOOR CONNECTED CAPACITY INDICATED ON OUTDOOR UNIT SCHEDULE FOR ASSOCIATED SYSTEM. PARTIAL CORRECTED CAPACITY ASSUMES SUFFICIENT DIVERSITY EXISTS SUCH THAT THE CONNECTED CAPACITY DE-RATE DOES NOT APPLY.
6. IT IS RECOMMENDED TO ALWAYS BASE HEATING CORRECTED CAPACITY ON FULL DEMAND.
7. CONDENSATE PUMP BUILT-IN.
8. PROVIDE CONDENSATE PUMP BY MANUFACTURER.

DIFFUSER SCHEDULE

UNIT TAG	'TITUS' MODEL NUMBER	TYPE	NECK DIMENSION (INCHES)	NOTES / OPTIONS
CD/CDL	MCD	MODULAR CORE	6X6	1, 2
			8X8	1
			10X10	1
			12X12	1
R	50R	EGGCRATE	6X6	1
			8X8	1
			10X10	1
			12X12	1
			14X14	1
			16X16	1
			18X18	1
			20X20	1
			22X22	1
E	50R	EGGCRATE	24X24	1

NOTES & OPTIONS:
1. PROVIDE LAY-IN BORDER TYPE
2. PROVIDE SURFACE MOUNT BORDER TYPE

TRANE VRF OUTDOOR UNIT SCHEDULE

UNIT TAG	'TRANE' MODEL NUMBER	NOMINAL COOLING CAPACITY (BTU/H)	NOMINAL HEATING CAPACITY (BTU/H)	DESIGN COOLING OUTDOOR TEMP DB/WB (°F)	DESIGN HEATING OUTDOOR TEMP WB (°F)	EER	VOLTAGE / PHASE	ELECTRICAL			NOTES / OPTIONS	UNIT WEIGHT	SOUND PRESSURE/SOUND POWER dB(A)	LIQUID LINE (IN. OD)	VAPOR LINE (IN. OD)	HIGH PRESSURE GAS LINE (IN. OD)
								MCA	MOP	No. of Fan						
CU1-1	4TVR0144B400NB	144,000.00	162,000.00	102/69	26.9	9.2	480V / 3-PHASE	26.4	40	2	1, 2, 3, 4, 5	700	62/83	1/2" BRAZE	1-1/8" BRAZE	7/8" BRAZE
CU1-2	4TVR0096B400NB	96,000.00	108,000.00	102/69	26.9	9.9	480V / 3-PHASE	19	25	2	1, 2, 3, 4, 5	650	61/81	3/8" BRAZE	7/8" BRAZE	3/4" BRAZE
CU2-1	4TVR0072B400NB	72,000.00	81,000.00	102/69	26.9	10.6	480V / 3-PHASE	16.4	20	1	1, 2, 3, 4, 5	450	60/81	3/8" BRAZE	3/4" BRAZE	5/8" BRAZE
CU3-1	4TYK6518A10N0BA	21,000.00	0.00	95/69	NA	11.1	208/ 1-PHASE	15	25	1	1, 2, 3, 4, 5	105	56/66	1/4"	1/2"	NA

NOTES & OPTIONS:
1. NOMINAL COOLING CAPACITIES ARE BASED ON INDOOR COIL EAT OF 80/67°F (DB/WB), OUTDOOR OF 102°F (DB).
2. NOMINAL HEATING CAPACITIES ARE BASED ON INDOOR COIL EAT OF 70°F (DB), OUTDOOR OF 43°F (WB).
3. EFFICIENCY VALUES FOR EER, IEER, COP ARE BASED ON AHRI 1230 TEST METHOD FOR MIXTURE OF DUCTED & NON-DUCTED INDOOR UNITS.
4. FOR SYSTEMS WITH MULTIPLE MODULES, REFRIGERANT PIPE DIMENSIONS INDICATE TOTAL SYSTEM COMBINED PIPING DOWNSTREAM OF MODULE TWINNING.
5. ADDED FIELD CHARGE LISTED IS IN ADDITION TO FACTORY CHARGE, THIS MUST BE UPDATED BASED UPON FINAL AS-BUILT PIPING LAYOUT.

ROOF EXHAUST/RELIEF HOOD SCHEDULE

LOCATION	'GREENHECK' MODEL NUMBER	SIZE (IN)	TOTAL PRESSURE DROP (INCH W.G.)	WEIGHT (LBS)	NOTES
ROOF	GRSR	8	0.15	7	1, 2
ROOF	GRSR	10	0.15	8	1, 2
ROOF	GRSR	12	0.25	10	1, 2

NOTES & OPTIONS:
1. SEE SHEET A230 FOR LOCATION OF EXHAUST AND RELIEF HOOD.
2. PROVIDE WITH MANUFACTURERS BACK DRAFT DAMPER.

TRANE DEDICATED OUTDOOR AIR SPLIT SYSTEM INDOOR FAN COIL UNIT

UNIT TAG	LOCATION	DIMENSIONS	'TRANE' MODEL NUMBER	TYPE	REMOTE SENSOR	NOMINAL COOLING CAPACITY (BTU/H)	NOMINAL HEATING CAPACITY (BTU/H)	COOLING DESIGN ENTERING TEMP DB/WB (°F)	HEATING DESIGN ENTERING TEMP DB/WB (°F)	DESIGN LEAVING TEMP DB (°F)	PEAK FAN AIRFLOW (CFM)	VOLTAGE / PHASE	ELECTRICAL MCA/MOP	WEIGHT (LBS)	NOTES / OPTIONS
FC6-1	OVERFLOW ROOM 129	48"W x 26" H x 55"D	TWE090D300A	CEILING CONCEALED TYPE (DUCTED)	WIRED SENSOR	60,760	65,970	105/72	32/30	70	1600	480/3	6.6/15	323	1, 2, 3

NOTES & OPTIONS:
1. SEE OUTDOOR UNIT SCHEDULE FOR OUTDOOR AMBIENT CONDITIONS, CONNECTED CAPACITY, AND OTHER FACTORS ASSOCIATED WITH CORRECTED CAPACITIES.
2. IT IS RECOMMENDED TO ALWAYS BASE HEATING CORRECTED CAPACITY ON FULL DEMAND.
3. PROVIDE CONDENSATE PUMP BY MANUFACTURER.

CEILING EXHAUST FAN SCHEDULE

UNIT TAG	LOCATION	'GREENHECK' MODEL NUMBER	CFM	TOTAL SP (INCH W.G.)	SONES	INPUT WATTS	VOLTS/ PHASE	WEIGHT (LBS)	NOTES
CEF-1	MENS RESTROOM	SP-A250	180	0.5	4	83.1	115/1	24	1
CEF-2	WOMEN'S RESTROOM	SP-A250	180	0.5	4	83.1	115/1	24	1

NOTES & OPTIONS:
1. PROVIDE WITH MANUFACTURERS BACK DRAFT DAMPER.

TRANE DEDICATED OUTDOOR AIR SPLIT SYSTEM OUTDOOR UNIT

UNIT TAG	'TRANE' MODEL NUMBER	NOMINAL COOLING CAPACITY (BTU/H)	DESIGN COOLING OUTDOOR TEMP DB/WB (°F)	EER	VOLTAGE / PHASE	ELECTRICAL			NOTES / OPTIONS	UNIT WEIGHT	LIQUID LINE (IN. OD)	VAPOR LINE (IN. OD)
						MCA	MOP	No. of Fan				
CU4-1	TWA073D40RA	74,000	105/72	12.5	480/3	14.9	20.0	1	1,2	328	1/2"	1-1/8"

NOTES & OPTIONS:
1. CONDENSING UNIT ONLY GROSS COOLING CAPACITY RATE AT 45 F SATURATED SUCTION TEMPERATURE AND AT 95 F AMBIENT. RATINGS SHOWN ARE TESTED AND CERTIFIED IN ACCORDANCE WITH AHRI STANDARD 340/360 OR 365 CERTIFICATION PROGRAM.
2. ADDED FIELD CHARGE IS IN ADDITION TO FACTORY CHARGE, THIS MUST BE UPDATED BASED UPON FINAL AS-BUILT PIPING LAYOUT.

LOUVER SCHEDULE

UNIT TAG	LOCATION	'GREENHECK' MODEL NUMBER	APPLICATION	CFM	PRESSURE DROP (INCH W.G.)	VELOCITY (FT/MIN)	WIDTH (IN.)	HEIGHT (IN.)	DEPTH (IN.)	FREE AREA (SF)	NOTES / OPTIONS
LV-1	OVERFLOW ROOM 129	EDK-402	INTAKE	1600	0.09	749	42	17	4	2.14	1

NOTES & OPTIONS:
1. PROVIDE INTERNAL BIRD SCREEN

TRANE VRF MODE CHANGE UNITS

UNIT TAG	LOCATION	SERVES	'TRANE' MODEL NUMBER	REFRIGERANT TYPE	DRAIN PIPE	MAXIMUM NUMBER OF CONNECTED INDOOR UNITS	VOLTAGE / PHASE	POWER INPUT (W)	WEIGHT (LBS)	NOTES / OPTIONS
MC1-1	BREAKOUT/CLOSED SESSION ROOM	FC1-1, FC1-2	MCUCUY2NCE000	R410A	1"	2	208/230V/1-PHASE	55	55	1, 2
MC1-2	BREAKOUT/CLOSED SESSION ROOM	FC2-1, FC2-2	MCUCUY2NCE000	R410A	1"	2	208/230V/1-PHASE	55	55	1, 2
MC3-3	BREAKOUT/CLOSED SESSION ROOM	FC3-2, FC3-1, FC2-3	MCUCUY6NCE000	R410A	1"	6	208/230V/1-PHASE	55	60	1, 2
MC2-4	BREAKOUT/CLOSED SESSION ROOM	FC2-4, FC5-1	MCUCUY4NCE000	R410A	1"	4	208/230V/1-PHASE	55	55	1, 2

NOTES & OPTIONS:
1. LIQUID PIPE CONNECTION FROM OUTDOOR UNIT 1/2" FLARE, SUCTION PIPE CONNECTION FROM THE OUTDOOR UNIT 1-1/8" BRAZE, HIGH PRESSURE GAS CONNECTION FROM THE OUTDOOR UNIT 3/4" BRAZE.
2. LIQUID PIPE CONNECTION TO INDOOR UNITS 3/8" FLARE AND SUCTION PIPE CONNECTION TO INDOOR UNITS 5/8" FLARE.

KITCHELL
Capital Expenditure Managers
2750 Gateway Oaks Drive
Suite 300
Sacramento, CA. 95833
(916) 648-9700

BCAG BUTTE COUNTY ASSOCIATION OF GOVERNMENTS

BUTTE REGIONAL TRANSIT OPERATIONS CENTER
326 HUSS LANE, CHICO CA

BUTTE COUNTY ASSOCIATION OF GOVERNMENTS

PROJECT STATUS:
BID SET

BUILDINGS:

SHEET TITLE:
MECHANICAL SCHEDULES

SCALE: 0 1/2 1 BAR IS ONE INCH ON ORIGINAL DRAWING. IF NOT ONE INCH ON THIS SHEET, ADJUST SCALES ACCORDINGLY

REVISIONS

No.	Description	Date

JOB NO. 5006A3
DATE 12/3/15
SHEET M801

LAST REVISION: 11/30/2015 2:00:18 PM

C:\BIM\BCAG TI_hornberger.rvt

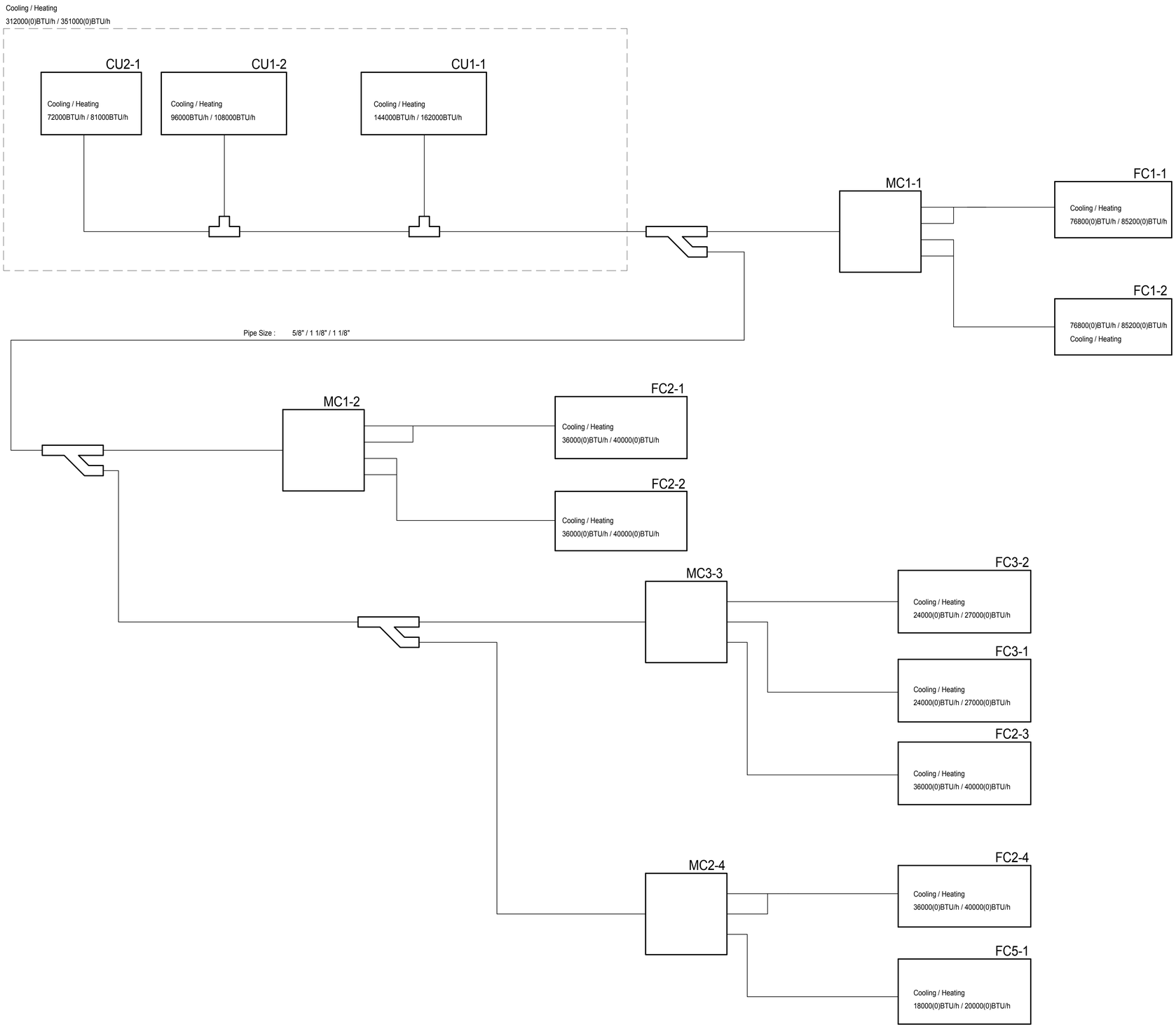

1 VRF SYSTEM PIPING DIAGRAM
NTS

SEQUENCE OF OPERATIONS

FAN COIL UNITS

THE CENTRALIZED MICROPROCESSOR SYSTEM CONTROLLER SHALL OPERATE THE MODE CONTROL UNITS IN CONJUNCTION WITH THE INDOOR FAN COIL UNITS AND OUTDOOR UNITS. THE VARIABLE REFRIGERANT FLOW SYSTEM SHALL BE CAPABLE OF OPERATING IN HEATING, COOLING, OR SIMULTANEOUS HEATING AND COOLING TO MAINTAIN EACH ZONE'S TEMPERATURE SETPOINT.

THE VARIABLE REFRIGERANT FLOW SYSTEM WILL START WHEN THE OCCUPIED MODE IS SET. THE OCCUPIED AND UNOCCUPIED MODE IS DETERMINED BY A TIME SCHEDULE IN THE CENTRALIZED MICROPROCESSOR SYSTEM CONTROLLER SET TO THE PARAMETERS OF THE OWNER. ALL SETPOINTS AND PARAMETERS ARE ACCESSIBLE AT THE CENTRALIZED SYSTEM CONTROLLER. THE VRF SYSTEM'S MORNING WARMUP TIME (ADJUSTABLE TIME DURATION) SHALL BE INCORPORATED IN OCCUPIED/UNOCCUPIED SETPOINT PARAMETERS.

AS THE ZONE TEMPERATURE RISES OR FALLS BELOW THE ZONE TEMPERATURE SETPOINT, THE SYSTEM CONTROLLER SHALL MODULATE THE REFRIGERANT FLOW TO THE COIL AND FAN SPEED TO MAINTAIN THE ZONE'S TEMPERATURE SETPOINT.

THE ZONE TEMPERATURE SETPOINT SHALL BE SET TO 74°F (ADJUSTABLE) FOR COOLING MODE AND 68°F (ADJUSTABLE) FOR HEATING MODE AS SENSED BY THERMOSTAT.

DEDICATED OUTDOOR AIR SYSTEM (DOAS)

THE DEDICATED OUTDOOR AIR SYSTEM IS TO SUPPLY 100% OUTSIDE AIR TO THE FAN COIL UNITS THAT REQUIRE OUTSIDE AIR FOR VENTILATION. THE SUPPLY TEMPERATURE OF THE DOAS SHALL BE MAINTAINED AT A SETPOINT OF 70°F (ADJUSTABLE) AS SENSED BY SUPPLY DUCT TEMPERATURE SENSOR.

THE DOAS SHALL OPERATE UPON CALL FROM ANY FAN COIL UNIT. THE DOAS SHALL BE INTERLOCKED WITH THE VRF SYSTEM'S START/STOP OPERATION. THE DOAS INDOOR FAN SHALL SLOWLY RAMP UP TO MEET REQUIRED AIRFLOW.

KITCHELL
Capital Expenditure Managers
2750 Gateway Oaks Drive
Suite 300
Sacramento, CA. 95833
(916) 648-9700

BCAG BUTTE COUNTY ASSOCIATION OF GOVERNMENTS

BUTTE REGIONAL TRANSIT OPERATIONS CENTER
326 HUSS LANE, CHICO CA

BUTTE COUNTY ASSOCIATION OF GOVERNMENTS

PROJECT STATUS:
BID SET
BUILDINGS:

SHEET TITLE:
VRF SYSTEM PIPING DIAGRAM & SEQUENCE OF OPERATIONS

SCALE: 0 1/2 1 BAR IS ONE INCH ON ORIGINAL DRAWING. IF NOT ONE INCH ON THIS SHEET, ADJUST SCALES ACCORDINGLY

REVISIONS

No.	Description	Date

JOB NO. 5006A3
DATE 12/3/15
SHEET M802

LAST REVISION: 11/30/2015 2:00:19 PM

C:\BIM\BCAG TI_hornberger.rvt

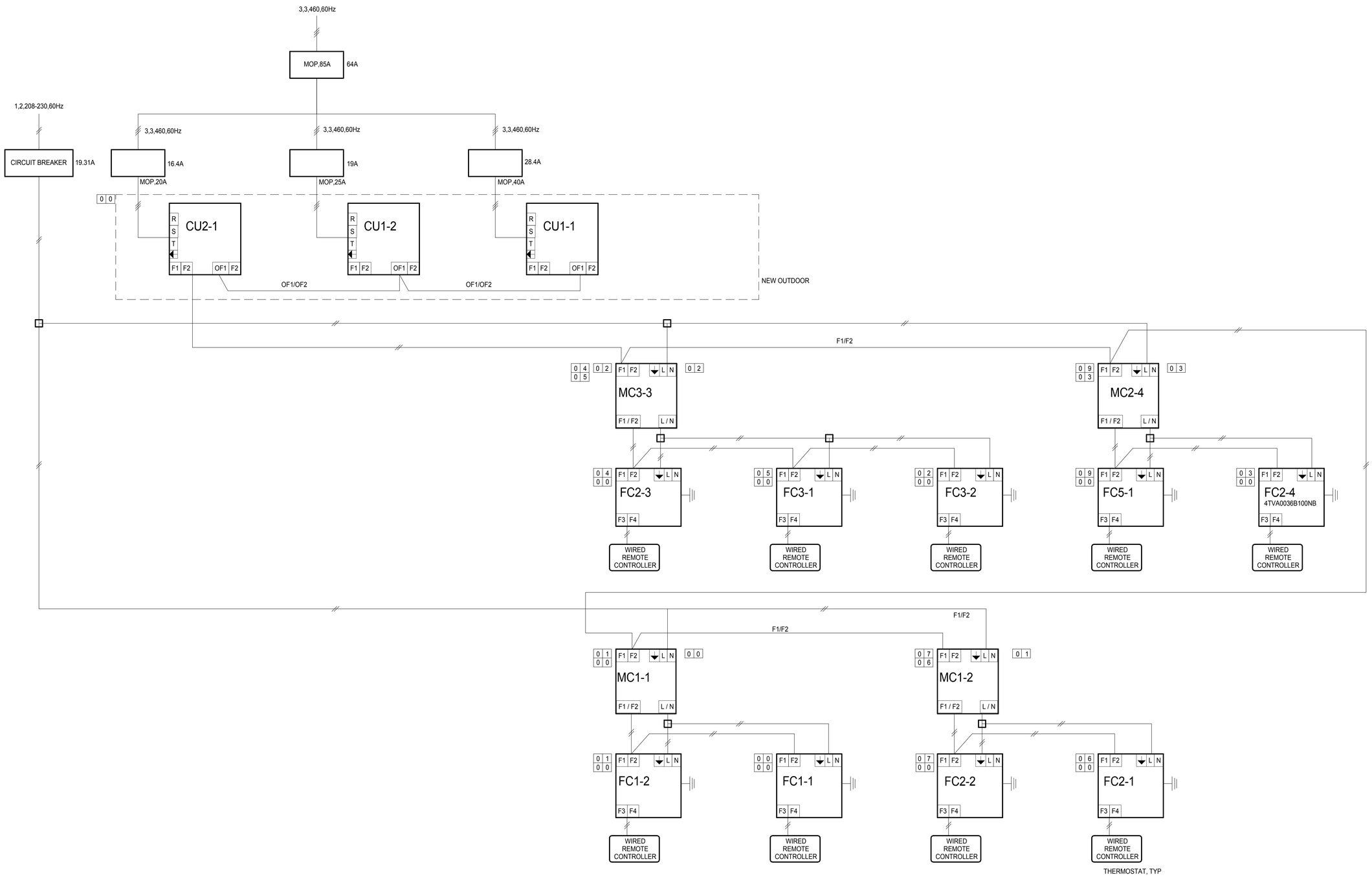

1 VRF SYSTEM WIRING DIAGRAM
NTS

LAST REVISION: 11/30/2015 2:00:20 PM

KITCHELL
Capital Expenditure Managers
2750 Gateway Oaks Drive
Suite 300
Sacramento, CA. 95833
(916) 648-9700

BCAG BUTTE COUNTY ASSOCIATION OF GOVERNMENTS

BUTTE REGIONAL TRANSIT OPERATIONS CENTER
326 HUSS LANE, CHICO CA

BUTTE COUNTY ASSOCIATION OF GOVERNMENTS

PROJECT STATUS:
BID SET
BUILDINGS:

SHEET TITLE:
VRF SYSTEM WIRING DIAGRAM

SCALE: 0 1/2 1 BAR IS ONE INCH ON ORIGINAL DRAWING. IF NOT ONE INCH ON THIS SHEET, ADJUST SCALES ACCORDINGLY

REVISIONS

No.	Description	Date

JOB NO. 5006A3
DATE 12/3/15
SHEET M803

C:\BIM\BCAG TI_hornberger.rvt

Project Name:	Butte Regional Transit Operations Center	NRCC-PRF-01-E	Page 1 of 21
Project Address:	326 Huss Lane Chico 95928	Calculation Date/Time:	13:18, Thu, Nov 05, 2015
Compliance Scope:	ExistingAlteration	Input File Name:	BRTOC_TI.xml

A. PROJECT GENERAL INFORMATION

1.	Project Location (city)	Chico	7.	# of dwelling units	0
2.	CA Zip Code	95928	8.	Standards Version	Compliance2015
3.	Climate Zone	11	9.	Compliance Software (version)	EnergyPro 6.7
4.	Total Conditioned Floor Area	9,446 ft²	10.	Building Orientation (deg)	(N) 43-deg
5.	Total Unconditioned Floor Area	0 ft²	11.	Permitted Scope of Work	ExistingAlteration
6.	# of Stories (Habitable Above Grade)	1	12.	Building Type(s)	Nonresidential

B. COMPLIANCE RESULTS FOR PERFORMANCE COMPONENTS § 140.1

BUILDING COMPLIES

1. Energy Component	2. Standard Design (TDV)	3. Proposed Design (TDV)	4. Compliance Margin (TDV)	5. Percent Better than Standard
Space Heating	0.1	40.0	-39.9	-39900.0%
Space Cooling	161.6	145.9	15.7	9.7%
Indoor Fans	162.4	32.5	129.9	80.0%
Heat Rejection	--	--	--	--
Pumps & Misc.	--	--	--	--
Domestic Hot Water	3.2	3.7	-0.5	-15.6%
Indoor Lighting	102.9	102.9	--	0.0%
COMPLIANCE TOTAL	430.2	325.0	105.2	24.5%
Receptacle	130.8	130.8		0.0%
Process	35.8	35.8		0.0%
Process Ltg	--	--		--
TOTAL	596.8	491.6		17.6%

Project Name:	Butte Regional Transit Operations Center	NRCC-PRF-01-E	Page 2 of 21
Project Address:	326 Huss Lane Chico 95928	Calculation Date/Time:	13:18, Thu, Nov 05, 2015
Compliance Scope:	ExistingAlteration	Input File Name:	BRTOC_TI.xml

C. PRIORITY PLAN CHECK/ INSPECTION ITEMS (in order of highest to lowest TDV energy savings)

1st	Indoor Fans: Check envelope and mechanical
2nd	Space Cooling: Check envelope and mechanical
3rd	Heat Rejection: Check envelope and mechanical
4th	Pumps & Misc.: Check mechanical
5th	Indoor Lighting: Check lighting
6th	Domestic Hot Water: Check mechanical
7th	Space Heating: Check envelope and mechanical

Compliance Margin By Energy Component (from Table B column 4)

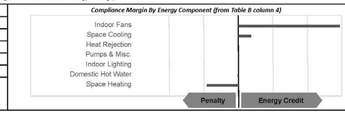

D. EXCEPTIONAL CONDITIONS

E. HERS VERIFICATION

This Section Does Not Apply

F. ADDITIONAL REMARKS

None Provided

Project Name:	Butte Regional Transit Operations Center	NRCC-PRF-01-E	Page 3 of 21
Project Address:	326 Huss Lane Chico 95928	Calculation Date/Time:	13:18, Thu, Nov 05, 2015
Compliance Scope:	ExistingAlteration	Input File Name:	BRTOC_TI.xml

G. COMPLIANCE PATH & CERTIFICATE OF COMPLIANCE SUMMARY

Identify which building components use the performance or prescriptive path for compliance. "NA"= not in project

For components that utilize the performance path, indicate the sheet number that includes mandatory notes on plans.

Building Component	Compliance Path	Compliance Forms *(required for submittal)*	Location of Mandatory Notes on Plans
Envelope	☒ Performance	NRCC-PRF-ENV-DETAILS (section of the NRCC-PRF-01-E)	
	☐ Prescriptive	NRCC-ENV-01 / 02 / 03 / 04 / 05 / 06-E	
	☐ NA		
Mechanical	☒ Performance	NRCC-PRF-MCH-DETAILS (section of the NRCC-PRF-01-E)	
	☐ Prescriptive	NRCC-MCH-01 / 02 / 03 / 04 / 05 / 06 / 07-E	
	☐ NA		
Domestic Hot Water	☒ Performance	NRCC-PRF-PLB-DETAILS (section of the NRCC-PRF-01-E)	
	☐ Prescriptive	NRCC-PLB-01-E	
	☐ NA		
Lighting (Indoor Conditioned)	☐ Performance	NRCC-PRF-LTI-DETAILS (section of the NRCC-PRF-01-E)	
	☐ Prescriptive	NRCC-LTI-01 / 02 / 03 / 04 / 05-E	
	☒ NA		
Covered Process: Commercial Kitchens	☐ Performance	S2 (section of the NRCC-PRF-01-E)	
	☐ Prescriptive	NRCC-PRC-01/ 03-E	
	☒ NA		
Covered Process: Computer Rooms	☒ Performance	S3 (section of the NRCC-PRF-01-E)	
	☐ Prescriptive	NRCC-PRC-01/ 04-E	
	☐ NA		
Covered Process: Laboratory Exhaust	☐ Performance	S4 (section of the NRCC-PRF-01-E)	
	☐ Prescriptive	NRCC-PRC-01/ 09-E	
	☒ NA		

Project Name:	Butte Regional Transit Operations Center	NRCC-PRF-01-E	Page 4 of 21
Project Address:	326 Huss Lane Chico 95928	Calculation Date/Time:	13:18, Thu, Nov 05, 2015
Compliance Scope:	ExistingAlteration	Input File Name:	BRTOC_TI.xml

G. COMPLIANCE PATH & CERTIFICATE OF COMPLIANCE SUMMARY

The following building components are only eligible for prescriptive compliance. Indicate which are relevant to the project.

Yes	NA	Prescriptive Requirement	Compliance Forms
☐	☒	Lighting (Indoor Unconditioned) §140.6	NRCC-LTI-01 / 02 / 03 / 04 / 05-E
☒	☐	Lighting (Outdoor) §140.7	NRCC-LTO-01 / 02 / 03-E
☐	☒	Lighting (Sign) §140.8	NRCC-LTS-01-E
☐	☒	Solar Thermal Water Heating: §140.5	NRCC-STH-01-E

The following building components may have mandatory requirements per Part 6. Indicate which are relevant to the project.

Yes	NA	Mandatory Requirement	Compliance Forms
☐	☒	Commissioning: §120.8 Simple Systems	NRCC-CXR-01 / 02 / 03 / 05-E
☐	☒	Complex Systems	NRCC-CXR-01 / 02 / 04 / 05-E
☐	☒	Electrical: §130.5	NRCC-ELC-01-E
☐	☒	Solar Ready: §110.10	NRCC-SRA-01 / 02-E
☐	☒	Covered Process: §120.6 Parking Garage	NRCC-PRC-01-E
☐	☒	Commercial Refrigeration	NRCC-PRC-02-E
☐	☒	Warehouse Refrigeration	NRCC-PRC-05-E
☐	☒	Compressed Air	NRCC-PRC-06/07/08-E
☐	☒	Process Boilers	NRCC-PRC-10-E
			NRCC-PRC-11-E

Project Name:	Butte Regional Transit Operations Center	NRCC-PRF-01-E	Page 5 of 21
Project Address:	326 Huss Lane Chico 95928	Calculation Date/Time:	13:18, Thu, Nov 05, 2015
Compliance Scope:	ExistingAlteration	Input File Name:	BRTOC_TI.xml

H. CERTIFICATE OF INSTALLATION, CERTIFICATE OF ACCEPTANCE & CERTIFICATE OF VERIFICATION SUMMARY (NRCI/NRCA/NRCV) – Confirmed

Documentation Author to indicate which Certificates must be submitted for the features to be recognized for compliance
(Retain copies and verify forms are completed and signed to post in field for Field Inspector to verify).
See Tables G. and H. in MCH and LTI Details Sections for Acceptance Tests and forms by equipment.

Building Component	Compliance Forms *(required for submittal)*	Pass	Fail
Envelope	☒ NRCI-ENV-01-E - For all buildings	☐	☐
	☐ NRCA-ENV-02-F - NFRC label verification for fenestration	☐	☐
Mechanical	☒ NRCI-MCH-01-E - For all buildings with Mechanical Systems	☐	☐
	☒ NRCA-MCH-02-A- Outdoor Air	☐	☐
	☒ NRCA-MCH-03-A – Constant Volume Single Zone HVAC	☐	☐
	☐ NRCA-MCH-04-H- Air Distribution Duct Leakage	☐	☐
	☐ NRCA-MCH-05-A- Air Economizer Controls	☐	☐
	☐ NRCA-MCH-06-A- Demand Control Ventilation	☐	☐
	☐ NRCA-MCH-07-A – Supply Fan Variable Flow Controls	☐	☐
	☐ NRCA-MCH-08-A- Valve Leakage Test	☐	☐
	☐ NRCA-MCH-09-A – Supply Water Temp Reset Controls	☐	☐
	☐ NRCA-MCH-10-A- Hydronic System Variable Flow Controls	☐	☐
	☐ NRCA-MCH-11-A – Auto Demand Shed Controls	☐	☐
	☐ NRCA-MCH-12-A- Packaged Direct Expansion Units	☐	☐
	☐ NRCA-MCH-13-A- Air Handling Units and Zone Terminal Units	☐	☐
	☐ NRCA-MCH-14-A- Distributed Energy Storage	☐	☐
	☐ NRCA-MCH-15-A – Thermal Energy Storage	☐	☐
	☐ NRCA-MCH-16-A- Supply Air Temp Reset Controls	☐	☐
	☐ NRCA-MCH-17-A – Condensate Water Temp Reset Controls	☐	☐
	☐ NRCA-MCH-18-A- Energy Management Controls Systems	☐	☐
	☐ NRCV-MCH-04-H- Duct Leakage Test	☐	☐

Project Name:	Butte Regional Transit Operations Center	NRCC-PRF-01-E	Page 6 of 21
Project Address:	326 Huss Lane Chico 95928	Calculation Date/Time:	13:18, Thu, Nov 05, 2015
Compliance Scope:	ExistingAlteration	Input File Name:	BRTOC_TI.xml

H. CERTIFICATE OF INSTALLATION, CERTIFICATE OF ACCEPTANCE & CERTIFICATE OF VERIFICATION SUMMARY (NRCI/NRCA/NRCV) – Confirmed

Documentation Author to indicate which Certificates must be submitted for the features to be recognized for compliance
(Retain copies and verify forms are completed and signed to post in field for Field Inspector to verify).
See Tables G. and H. in MCH and LTI Details Sections for Acceptance Tests and forms by equipment.

Building Component	Compliance Forms *(required for submittal)*	Pass	Fail
Plumbing	☒ NRCI-PLB-01-E - For all buildings with Plumbing Systems	☐	☐
	☐ NRCI-PLB-02-E - required on central systems in high-rise residential, hotel/motel application.	☐	☐
	☐ NRCI-PLB-03-E - Single dwelling unit systems in high-rise residential, hotel/motel application.	☐	☐
	☐ NRCI-PLB-21-E - HERS verified central systems in high-rise residential, hotel/motel application.	☐	☐
	☐ NRCI-PLB-22-E - HERS verified single dwelling unit systems in high-rise residential, hotel/motel application.	☐	☐
	☐ NRCV-PLB-21-H - HERS verified central systems in high-rise residential, hotel/motel application.	☐	☐
	☐ NRCV-PLB-22-H - HERS verified single dwelling unit systems in high-rise residential, hotel/motel application.	☐	☐
	☐ NRCI-STH-01-E - Any solar water heating	☐	☐
Indoor Lighting	☐ NRCI-LTI-01-E - For all buildings	☐	☐
	☐ NRCI-LTI-02-E - Lighting control system, or for an Energy Management Control System (EMCS)	☐	☐
	☐ NRCI-LTI-03-E - Line-voltage track lighting integral current limiter, or for a supplementary overcurrent protection panel used to energize only line-voltage track lighting	☐	☐
	☐ NRCI-LTI-04-E - Two interlocked systems serving an auditorium, a convention center, a conference room, or a theater	☐	☐
	☐ NRCI-LTI-05-E – Lighting Control Credit Power Adjustment Factor (PAF)	☐	☐
	☐ NRCI-LTI-06-E - Additional wattage installed in a video conferencing studio	☐	☐
	☐ NRCA-LTI-02-A - Occupancy sensors and automatic time switch controls.	☐	☐
	☐ NRCA-LTI-03-A - Automatic daylighting controls	☐	☐
	☐ NRCA-LTI-04-A - Demand responsive lighting controls	☐	☐
Outdoor Lighting	☐ NRCI-LTO-01-E – Outdoor Lighting	☐	☐
	☐ NRCI-LTO-02-E- EMCS Lighting Control System	☐	☐
	☐ NRCA-LTO-02-A - Outdoor Lighting Control	☐	☐
Sign Lighting	☐ NRCI-LTS-01-E – Sign Lighting	☐	☐
Electrical	☐ NRCI-ELC-01-E - Electrical Power Distribution	☐	☐
Photovoltaic	☐ NRCI-SPV-01-E Photovoltaic Systems	☐	☐

Project Name:	Butte Regional Transit Operations Center	NRCC-PRF-01-E	Page 7 of 21
Project Address:	326 Huss Lane Chico 95928	Calculation Date/Time:	13:18, Thu, Nov 05, 2015
Compliance Scope:	ExistingAlteration	Input File Name:	BRTOC_TI.xml

H. CERTIFICATE OF INSTALLATION, CERTIFICATE OF ACCEPTANCE & CERTIFICATE OF VERIFICATION SUMMARY (NRCI/NRCA/NRCV) – Confirmed

Documentation Author to indicate which Certificates must be submitted for the features to be recognized for compliance
(Retain copies and verify forms are completed and signed to post in field for Field Inspector to verify).
See Tables G. and H. in MCH and LTI Details Sections for Acceptance Tests and forms by equipment.

Building Component	Compliance Forms *(required for submittal)*	Pass	Fail
Covered Process	☐ NRCI-PRC-01-E Refrigerated Warehouse	☐	☐
	☐ NRCA-PRC-01-F- Compressed Air Systems	☐	☐
	☐ NRCA-PRC-02-F- Kitchen Exhaust	☐	☐
	☐ NRCA-PRC-03-F- Garage Exhaust	☐	☐
	☐ NRCA-PRC-04-F- Refrigerated Warehouse- Evaporator Fan Motor Controls	☐	☐
	☐ NRCA-PRC-05-F- Refrigerated Warehouse- Evaporative Condenser Controls	☐	☐
	☐ NRCA-PRC-06-F- Refrigerated Warehouse- Air Cooled Condenser Controls	☐	☐
	☐ NRCA-PRC-07F- Refrigerated Warehouse- Variable Speed Compressor	☐	☐
	☐ NRCA-PRC-08-F- Electrical Resistance Underslab Heating System	☐	☐

I. ENVELOPE GENERAL INFORMATION (See NRCC-PRF-ENV-DETAILS for more information)

1.	Total Conditioned Floor Area	9,446 ft²	5.	Number of Floors Above Grade	1
2.	Total Unconditioned Floor Area	0 ft²	6.	Number of Floors Below Grade	0
3.	Addition Conditioned Floor Area	0 ft²			
4.	Addition Unconditioned Floor Area	0 ft²			

Confirmed: Pass ☐ Fail ☐

7. Opaque Surfaces & Orientation	8. Total Gross Surface Area	9. Total Fenestration Area	10. Window to Wall Ratio	Pass	Fail
North Wall	1,848 ft²	550 ft²	29.8%	☐	☐
East Wall	380 ft²	108 ft²	28.4%	☐	☐
South Wall	1,563 ft²	358 ft²	22.9%	☐	☐
West Wall	1,487 ft²	0 ft²	00.0%	☐	☐
Total	5,278 ft²	1,016 ft²	19.2%	☐	☐
Roof	9,446 ft²	0 ft²	00.0%	☐	☐

Project Name:	Butte Regional Transit Operations Center	NRCC-PRF-01-E	Page 8 of 21
Project Address:	326 Huss Lane Chico 95928	Calculation Date/Time:	13:18, Thu, Nov 05, 2015
Compliance Scope:	ExistingAlteration	Input File Name:	BRTOC_TI.xml

J. FENESTRATION ASSEMBLY SUMMARY § 110.6 — Confirmed

1. Fenestration Assembly Name / Tag or I.D.	2. Fenestration Type	3. Certification Method[1]	4. Assembly Method	5. Area ft²	6. Overall U-factor	7. Overall SHGC	8. Overall VT	9. Status[2]	Pass	Fail
Vinyl Low-E Argon Window	VerticalFenestration	NFRCRated	Manufactured	1016	0.31	0.37	0.50	A	☐	☐

[1] Newly installed fenestration shall have a certified NFRC label Certificate or use the CEC default tables found in Table 110.6-A and Table 110.6-B. Site-built fenestration less than 1,000 ft², or more than or equal to 1,000 ft² see Reference Nonresidential Appendix JA4.

[2] Status: N - New, A - Altered, E - Existing

Taking compliance credit for fenestration shading devices? (if "Yes", see NRCC-PRF-ENV-DETAILS for more information)

K. OPAQUE SURFACE ASSEMBLY SUMMARY § 120.7/ § 140.3 — Confirmed

1. Surface Name	2. Surface Type	3. Area (ft²)	4. Framing Type	5. Cavity R-Value	6. Continuous R-Value	7. U-Factor / F-Factor / C-Factor	8. Status[1]	Pass	Fail
High Ceiling R-30 Roof Alt9	Roof	7268	Wood	30	NA	U-Factor: 0.034	E	☐	☐
High Ceiling Wall11	ExteriorWall	4145	Metal	0	15	U-Factor: 0.057	A	☐	☐
Slab On Grade15	UndergroundFloor	9446	NA	0	NA	F-Factor: 0.730	E	☐	☐
Low Ceiling Wall25	InteriorWall	8609	NA	0	NA	U-Factor: 0.694	E	☐	☐
Low Ceiling R-30 Roof Alt50	Roof	2178	Wood	30	NA	U-Factor: 0.042	E	☐	☐
Low Ceiling Wall251	ExteriorWall	1133	NA	0	NA	U-Factor: 1.075	A	☐	☐

[1] Status: N - New, A - Altered, E - Existing

L. ROOFING PRODUCT SUMMARY § 140.3 — Confirmed

1. Product Type	2. Product ≥25 lb ft²	3. Aged Solar Reflectance	4. Thermal Emittance	5. SRI	6. Cool Roof Credit	7. CRRC Product ID Number	Pass	Fail
High Ceiling R-30 Roof Alt9	No	0.08	0.75	NA	No	NA	☐	☐
Low Ceiling R-30 Roof Alt50	No	0.08	0.75	NA	No	NA	☐	☐

Project Name:	Butte Regional Transit Operations Center	NRCC-PRF-01-E	Page 9 of 21
Project Address:	326 Huss Lane Chico 95928	Calculation Date/Time:	13:18, Thu, Nov 05, 2015
Compliance Scope:	ExistingAlteration	Input File Name:	BRTOC_TI.xml

M. HVAC SYSTEM SUMMARY (see NRCC-PRF-MCH-DETAILS for more information) § 110.1 / § 110.2

Dry System Equipment [1] (Fan & Economizer info included below in Table N) — Confirmed

1. Equip Name	2. Equip Type	3. System Type (Simple [2] or Complex [3])	4. Qty	5. Total Heating Output (kBtu/h)	6. Supp Heat Source (Y/N)	7. Supp Heat Output (kBtu/h)	8. Total Cooling Output (kBtu/h)	9. Efficiency: Cooling	9. Efficiency: Heating	10. Acceptance Testing Required? (Y/N) [4]	11. Status[5]	Pass	Fail
FC1-1_3	SZHP (Split3Phase)	Simple	1	85	Yes	2	74	EER-12.2	COP-3.5	Yes	N	☐	☐
FC1-2_16	SZHP (Split3Phase)	Simple	1	85	Yes	2	74	EER-12.2	COP-3.5	Yes	N	☐	☐
FC2-1_27	SZHP (Split3Phase)	Simple	1	40	Yes	2	35	SEER-14.0	HSPF-8.2	Yes	N	☐	☐
Zone_FC2-129	Exhaust (Packaged3Phase)	Simple	1	0	No	0	0	NA	NA	No	E	☐	☐
FC2-2_45	SZHP (Split3Phase)	Simple	1	40	Yes	2	35	SEER-14.0	HSPF-8.2	Yes	N	☐	☐
FC2-3_68	SZHP (Split3Phase)	Simple	1	40	Yes	2	35	SEER-14.0	HSPF-8.2	Yes	N	☐	☐
FC2-4_92	SZHP (Split3Phase)	Simple	1	40	Yes	2	35	SEER-14.0	HSPF-8.2	Yes	N	☐	☐
FC3-1_103	SZHP (Split3Phase)	Simple	1	27	Yes	2	23	SEER-14.0	HSPF-8.2	Yes	N	☐	☐
FC3-2_118	SZHP (Split3Phase)	Simple	1	27	Yes	2	23	SEER-14.0	HSPF-8.2	Yes	N	☐	☐
FC4-1_150	SZAC (CRAC)	Simple	1	0	No	0	17	SEER-14.0	NA	Yes	N	☐	☐
FC5-1_158	SZHP (Split3Phase)	Simple	1	20	No	0	17	SEER-14.0	HSPF-8.2	Yes	N	☐	☐

Wet System Equipment [2]								*Pumps*					Confirmed	
12. Equip Name	13. Equip Type	14. Qty	15. Vol (gal)	16. Rated Capacity (kBtu/h)	17. Efficiency	18. Standby Loss	19. Tank Ext. R Value	20. Qty	21. GPM	22. HP	23. VSD (Y/N)	24. Status[3]	Pass	Fail
A O Smith Water Product2	Storage	1	75	75	Thrml. Eff.: 0.800	0.0244	NA	NA	NA	NA	No	N	☐	☐

[1] Dry System Equipment includes furnaces, air handling units, heat pumps, etc.

[2] Wet System Equipment includes boilers, chillers, cooling towers, water heaters, etc.

[3] Simple Systems must complete NRCC-CXR-01 E commissioning design review form

[4] Complex Systems must complete NRCC-CXR-04 E commissioning design review form

[5] A summary of which acceptance tests are applicable is provided in NRCC-PRF-MCH-DETAILS

[6] Status: N - New, A - Altered, E - Existing

Discrepancy between modeled and designed equipment sizing? (if "Yes", see Table F. "Additional Remarks" for an explanation). No

LAST REVISION: 11/30/2015 2:00:22 PM

KITCHELL
Capital Expenditure Managers
2750 Gateway Oaks Drive
Suite 300
Sacramento, CA. 95833
(916) 648-9700

BCAG BUTTE COUNTY ASSOCIATION OF GOVERNMENTS

BUTTE REGIONAL TRANSIT OPERATIONS CENTER
326 HUSS LANE, CHICO CA

BUTTE COUNTY ASSOCIATION OF GOVERNMENTS

PROJECT STATUS:

BID SET

BUILDINGS:

SHEET TITLE:

MECHANICAL TITLE 24

SCALE: 0 1/2 1 BAR IS ONE INCH ON ORIGINAL DRAWING. IF NOT ONE INCH ON THIS SHEET, ADJUST SCALES ACCORDINGLY

REVISIONS

No.	Description	Date

JOB NO. 5006A3

DATE 12/3/15

SHEET M901

C:\BIM\BCAG TI_homberger.rvt

Project Name:	Butte Regional Transit Operations Center	NRCC-PRF-01-E	Page 10 of 21
Project Address:	326 Huss Lane Chico 95928	Calculation Date/Time:	13:18, Thu, Nov 05, 2015
Compliance Scope:	ExistingAlteration	Input File Name:	BRTOC_TI.xml

N. ECONOMIZER & FAN SYSTEMS SUMMARY[1] — § 140.4

1.	2.	3.					4.					5.	Confirmed	
Equip Name	Outside Air	Supply Fan					Return Fan					Economizer Type (If present)	Pass	Fail
	CFM	CFM	HP	BHP	TSP (inch WC)	Control	CFM	HP	BHP	TSP (inch WC)	Control			
FC1-1_3	2175	2300	0.421	0.421	0.70	ConstantVolume	NA	NA	NA	NA	NA	NoEconomizer	☐	☐
FC1-2_16	2269	2300	0.421	0.421	0.70	ConstantVolume	NA	NA	NA	NA	NA	NoEconomizer	☐	☐
FC2-1_27	622	989	0.167	0.167	0.54	ConstantVolume	NA	NA	NA	NA	NA	NoEconomizer	☐	☐
FC2-2_45	102	989	0.167	0.167	0.54	ConstantVolume	NA	NA	NA	NA	NA	NoEconomizer	☐	☐
FC2-3_68	176	989	0.167	0.167	0.54	ConstantVolume	NA	NA	NA	NA	NA	NoEconomizer	☐	☐
FC2-4_92	994	989	0.167	0.167	0.54	ConstantVolume	NA	NA	NA	NA	NA	NoEconomizer	☐	☐
FC3-1_103	212	653	0.175	0.175	0.85	ConstantVolume	NA	NA	NA	NA	NA	NoEconomizer	☐	☐
FC3-2_118	144	653	0.175	0.175	0.85	ConstantVolume	NA	NA	NA	NA	NA	NoEconomizer	☐	☐
FC4-1_150	50	560	0.421	0.421	2.39	ConstantVolume	NA	NA	NA	NA	NA	NoEconomizer	☐	☐
FC5-1_158	50	495	0.040	0.040	0.25	ConstantVolume	480	0.039	0.039	0.31	ConstantVolume	NoEconomizer	☐	☐

[1] *Mechanical ventilation calculations and exhaust fans are included in the NRCC-PRF-MCH-DETAILS section*

O. EQUIPMENT CONTROLS — § 120.2

1.	2.	3.	Confirmed Pass	Confirmed Fail
Equip Name	Equip Type	Controls		
FC1-1_3	SZHP	No DCV Controls No Economizer No Supply Air Temp. Control	☐	☐
FC1-2_16	SZHP	No DCV Controls No Economizer No Supply Air Temp. Control	☐	☐
FC2-1_27	SZHP	No DCV Controls No Economizer No Supply Air Temp. Control	☐	☐

Project Name:	Butte Regional Transit Operations Center	NRCC-PRF-01-E	Page 11 of 21
Project Address:	326 Huss Lane Chico 95928	Calculation Date/Time:	13:18, Thu, Nov 05, 2015
Compliance Scope:	ExistingAlteration	Input File Name:	BRTOC_TI.xml

O. EQUIPMENT CONTROLS — § 120.2

1.	2.	3.	Confirmed Pass	Confirmed Fail
Equip Name	Equip Type	Controls		
Zone_FC2-129	Exhaust	No DCV Controls Economizer type not properly specified No Supply Air Temp. Control	☐	☐
FC2-2_45	SZHP	No DCV Controls No Economizer No Supply Air Temp. Control	☐	☐
FC2-3_68	SZHP	No DCV Controls No Economizer No Supply Air Temp. Control	☐	☐
FC2-4_92	SZHP	No DCV Controls No Economizer No Supply Air Temp. Control	☐	☐
FC3-1_103	SZHP	No DCV Controls No Economizer No Supply Air Temp. Control	☐	☐
FC3-2_118	SZHP	No DCV Controls No Economizer No Supply Air Temp. Control	☐	☐
FC4-1_150	SZAC	No DCV Controls No Economizer No Supply Air Temp. Control	☐	☐
FC5-1_158	SZHP	No DCV Controls No Economizer No Supply Air Temp. Control	☐	☐
BTROC1 - SHW	Service Hot Water, Primary Only	Fixed Temperature Control, No DDC	☐	☐

P. SYSTEM DISTRIBUTION SUMMARY — § 120.4/ § 140.4(i)

This Section Does Not Apply

Does the Project Include Zonal Systems? (If "Yes", see NRCC-PRF-MCH-DETAILS for system information)	No
Does the Project Include a Solar Hot Water System? (If "Yes", see NRCC-PRF-MCH-DETAILS for system information)	No
Multifamily or Hotel/ Motel Occupancy? (If "Yes", see NRCC-PRF-MCH-DETAILS for DHW system information)	No

Project Name:	Butte Regional Transit Operations Center	NRCC-PRF-01-E	Page 12 of 21
Project Address:	326 Huss Lane Chico 95928	Calculation Date/Time:	13:18, Thu, Nov 05, 2015
Compliance Scope:	ExistingAlteration	Input File Name:	BRTOC_TI.xml

Q. INDOOR CONDITIONED LIGHTING GENERAL INFO (see NRCC-PRF-LTI-DETAILS for more info)[3] — § 140.6

1.	2.	3.	4.	5.		Confirmed Pass	Confirmed Fail
Occupancy Type [1]	Conditioned Floor Area [2] (ft²)	Installed Lighting Power (Watts)	Lighting Control Credits (Watts)	Additional (Custom) Allowance			
				Area Category Footnotes (Watts)	Tailored Method (Watts)		
Convention, Conference, Multipurpose and Meeting Center Areas	6,090	8,527	0	0	0	☐	☐
Office (250 square feet in floor area or less)	2,659	2,659	0	0	0	☐	☐
Kitchen, Commercial Food Preparation	476	762	0	0	0	☐	☐
Computer Room	86	69	0	0	0	☐	☐
Electrical, Mechanical, Telephone Rooms	135	95	0	0	0	☐	☐
Building Total:	**9,446**	**12,112**		**0**			

[1] *See Table 149.6-C*
[2] *See NRCC-LTI-01-E for unconditioned spaces*
[3] *Lighting information for existing spaces modeled is not included in the table*

R. INDOOR CONDITIONED LIGHTING SCHEDULE (Adapted from NRCC-LTI-01-E)[1] — § 130.0

This Section Does Not Apply

[1] *If lighting power densities were used in the compliance model Building Departments will need to check prescriptive forms for Luminaire Schedule details.*

S1. COVERED PROCESS SUMMARY – ENCLOSED PARKING GARAGES — § 140.9

This Section Does Not Apply

Project Name:	Butte Regional Transit Operations Center	NRCC-PRF-01-E	Page 13 of 21
Project Address:	326 Huss Lane Chico 95928	Calculation Date/Time:	13:18, Thu, Nov 05, 2015
Compliance Scope:	ExistingAlteration	Input File Name:	BRTOC_TI.xml

S2. COVERED PROCESS SUMMARY – COMMERCIAL KITCHENS — § 140.9

Space Name	Exhaust Hood Style	Exhaust Hood Duty	Exhaust Length (ft)	Exhaust Flow Rate (cfm)	Confirmed Pass	Confirmed Fail
S-7-Zone_FC3-1		Light		NaN	☐	☐
		Light		NaN	☐	☐
		Light		NaN	☐	☐
		Light		NaN	☐	☐
		Light		NaN	☐	☐

S3. COVERED PROCESS SUMMARY – COMPUTER ROOMS — § 140.9

Computer Room System Name	Cooling Capacity (tons)	Economizer Type	Fan Power (watts)	Confirmed Pass	Confirmed Fail
FC4-1_150	1.4	None	0.36	☐	☐

S4. COVERED PROCESS SUMMARY – LABORATORY EXHAUSTS — § 140.9

This Section Does Not Apply

T. UNMET LOAD HOURS

Thermal Zone Name	Cooling Unmet Load Hour Limit for Thermal Zone	Proposed Cooling Unmet Load Hours	Heating Unmet Load Hour Limit for Thermal Zone	Proposed Heating Unmet Load Hours
1-Zone_FC1-1	150	694.25	150	87
2-Zone_FC1-2	150	764.25	150	81.5
6-Zone_FC2-4	150	1098.5	150	92.75
7-Zone_FC3-1	150	302	150	11.5

U. ENERGY USE SUMMARY

	Electric (kWh/yr)	Natural Gas (therms/yr)
Total Annual Baseline	218390	190.208
Total Annual Proposed	180020	215.034

Project Name:	Butte Regional Transit Operations Center	NRCC-PRF-01-E	Page 14 of 21
Project Address:	326 Huss Lane Chico 95928	Calculation Date/Time:	13:18, Thu, Nov 05, 2015
Compliance Scope:	ExistingAlteration	Input File Name:	BRTOC_TI.xml

DOCUMENTATION AUTHOR'S DECLARATION STATEMENT — § 10-103

I certify that this Certificate of Compliance documentation is accurate and complete.

Documentation Author Name: Andrew Pascual	Signature:
Company: Kitchell	
Address: 2750 Gateway Oaks Drive, Suite 300	Signature Date:
City/State/Zip: Sacramento CA 95833	CEA Identification (if applicable):
Phone: (916) 648-9700	

RESPONSIBLE PERSON'S DECLARATION STATEMENT

I certify the following under penalty of perjury, under the laws of the State of California:

1. I hereby affirm that I am eligible under the provisions of Division 3 of the Business and Professions Code to sign this document as the person responsible for its preparation; and that I am licensed in the State of California as a civil engineer, mechanical engineer, electrical engineer, or I am a licensed architect.
2. I affirm that I am eligible under the provisions of Division 3 of the Business and Professions Code by section 5537.2 or 6737.3 to sign this document as the person responsible for its preparation; and that I am a licensed contractor performing this work.
3. I affirm that I am eligible under Division 3 of the Business and Professions Code to sign this document because it pertains to a structure or type of work described as exempt pursuant to Business and Professions Code Sections 5537, 5538 and 6737.1.

Responsible Envelope Designer Name: Jay Monnin	Signature:
Company: Kitchell	
Address: 2750 Gateway Oaks Dr. Ste 300	Date Signed:
City/State/Zip: Sacramento California 95833	Declaration Statement Type:
Phone: (916) 648-9700	Title: License #:
Responsible Lighting Designer Name: Milutin Backovich	Signature: NOT IN SCOPE
Company: Kitchell	
Address: 2750 Gateway Oaks Dr. Ste 300	Date Signed:
City/State/Zip: Sacramento California 95833	Declaration Statement Type:
Phone: (916) 648-9700	Title: License #:
Responsible Mechanical Designer Name: Henry Sayarath	Signature:
Company: Kitchell	
Address: 2750 Gateway Oaks Dr. Ste 300	Date Signed:
City/State/Zip: Sacramento California 95833	Declaration Statement Type:
Phone: (916) 648-9700	Title: License #:

Project Name:	Butte Regional Transit Operations Center	NRCC-PRF-01-E	Page 15 of 21
Project Address:	326 Huss Lane Chico 95928	Calculation Date/Time:	13:18, Thu, Nov 05, 2015
Compliance Scope:	ExistingAlteration	Input File Name:	BRTOC_TI.xml

NRCC-PRF-ENV-DETAILS -SECTION START-

A. OPAQUE SURFACE ASSEMBLY DETAILS

1.	2.	3.	4.	Confirmed Pass	Confirmed Fail
Surface Name	Surface Type	Description of Assembly Layers	Notes		
High Ceiling R-30 Roof Alt9	Roof	Asphalt shingles - 1/4 in. Vapor permeable felt - 1/8 in. Plywood - 1/2 in. Air - Cavity - Wall Roof Ceiling - 4 in. or more Wood framed roof, 24in. OC, 9.25in., R-30 Gypsum Board - 1/2 in.		☐	☐
High Ceiling Wall11	ExteriorWall	Cellular polyisocyanurate (unfaced) - 2 1/2 in. R15 Air - Wall - 3 1/2 in. Air - Metal Wall Framing - 16 or 24 in. OC Vapor permeable felt - 1/8 in. Gypsum Board - 3/8 in.		☐	☐
Slab On Grade15	UndergroundFloor			☐	☐
Low Ceiling Wall25	InteriorWall	Stucco - 3/8 in.		☐	☐
Low Ceiling R-30 Roof Alt50	Roof	Asphalt shingles - 1/4 in. Vapor permeable felt - 1/8 in. Plywood - 1/2 in. Air - Cavity - Wall Roof Ceiling - 4 in. or more Wood framed roof, 16in. OC, 3.5in., R-30 Gypsum Board - 1/2 in.		☐	☐
Low Ceiling Wall251	ExteriorWall	Stucco - 3/8 in.		☐	☐

B. OVERHANG DETAILS (Adapted from NRCC-ENV-02-E)

1.	2.	3.		4.	Confirmed Pass	Confirmed Fail
Fenestration Tag/ID	Fenestration Orientation	Overhang Dimensions		Side fin		
		Horizontal Projection	Distance Above Window	Vertical Projection		
Tall Window12	North	5.0 ft.	0.1 ft.	Left: 0 ft., Right: 0 ft.	☐	☐
Tall Window13	North	5.0 ft.	0.1 ft.	Left: 0 ft., Right: 0 ft.	☐	☐
SW Window85	North	2.0 ft.	2.5 ft.	Left: 0 ft., Right: 0 ft.	☐	☐
Tall Window101	South	5.0 ft.	0.1 ft.	Left: 0 ft., Right: 0 ft.	☐	☐

Project Name:	Butte Regional Transit Operations Center	NRCC-PRF-01-E	Page 16 of 21
Project Address:	326 Huss Lane Chico 95928	Calculation Date/Time:	13:18, Thu, Nov 05, 2015
Compliance Scope:	ExistingAlteration	Input File Name:	BRTOC_TI.xml

C. OPAQUE DOOR SUMMARY

1.	2.	3.	4.	5.	Confirmed Pass	Confirmed Fail
Opaque Door Assembly Name / Tag or I.D.	Door Type	Certification Method	Operation	Overall U-factor		
Wood Door21	WoodGreaterThanOrEqualTo1.75InThickDoor	DefaultPerformance	Swinging	0.500	☐	☐

NRCC-PRF-MCH-DETAILS -SECTION START-

A. MECHANICAL VENTILATION AND REHEAT *(Adapted from 2013-NRCC-MCH-03-E)*

1. DESIGN AIR FLOWS								2. VENTILATION (§ 120.1)												Confirmed Pass	Confirmed Fail
CONDITIONED ZONE NAME	HEATING / COOLING SYSTEM ID	DESIGN PRIMARY AIR FLOW (CFM)	ESTIMATED PRIMARY MINIMUM AIR FLOW (CFM)	MINIMUM PRIMARY AIR FLOW FRACTION	MAXIMUM PRIMARY AIR FLOW (CFM)	MAXIMUM HEATING AIR FLOW FRACTION	DISC.CONTROL (Y/N)	VENT SYSTEM ID	CONDITIONED AREA (ft2)	MIN. VENT PER AREA (CFM/ft2)	DESIGN NUM. OF PEOPLE	MIN. VENT PER PERSON (CFM/person)	REQ'D VENT AIR FLOW (CFM)	DESIGN VENT AIR FLOW (CFM)	TRANSFER AIR FLOW (CFM)	DCV (Y/N)					
1-Zone_FC1-1	FC1-1_3	2,300	NA	NA	NA	NA	N	FC1-1_3	2,175	0.50	145	7.5	1,088	2,175	NA	N	☐	☐			
2-Zone_FC1-2	FC1-2_16	2,300	NA	NA	NA	NA	N	FC1-2_16	2,299	0.50	153	7.5	1,150	2,269	NA	N	☐	☐			
3-Zone_FC2-1	FC2-1_27	989	NA	NA	NA	NA	N	FC2-1_27	622	0.50	41	7.5	311	622	NA	N	☐	☐			
4-Zone_FC2-2	FC2-2_45	989	NA	NA	NA	NA	N	FC2-2_45	677	0.15	7	15.0	102	102	NA	N	☐	☐			
5-Zone_FC2-3	FC2-3_68	989	NA	NA	NA	NA	N	FC2-3_68	1,025	0.15	12	13.1	154	176	NA	N	☐	☐			
6-Zone_FC2-4	FC2-4_92	989	NA	NA	NA	NA	N	FC2-4_92	994	0.50	66	7.5	497	994	NA	N	☐	☐			
7-Zone_FC3-1	FC3-1_103	653	NA	NA	NA	NA	N	FC3-1_103	476	0.15	7	10.1	71	212	NA	N	☐	☐			
8-Zone_FC3-2	FC3-2_118	653	NA	NA	NA	NA	N	FC3-2_118	957	0.15	10	15.0	144	144	NA	N	☐	☐			
9-Zone_FC4-1	FC4-1_150	560	NA	NA	NA	NA	N	FC4-1_150	86	0.15	1	12.9	13	50	NA	N	☐	☐			
10-Zone_FC5-1	FC5-1_158	495	NA	NA	NA	NA	N	FC5-1_158	135	0.15	1	20.3	20	50	NA	N	☐	☐			
								TOTAL	9,446		443		3,550	6,794	NA		☐	☐			

Project Name:	Butte Regional Transit Operations Center	NRCC-PRF-01-E	Page 17 of 21
Project Address:	326 Huss Lane Chico 95928	Calculation Date/Time:	13:18, Thu, Nov 05, 2015
Compliance Scope:	ExistingAlteration	Input File Name:	BRTOC_TI.xml

B. ZONAL SYSTEM AND TERMINAL UNIT SUMMARY — § 140.4

1.	2.	3.	4.		5.	6.	7.			8.			Confirmed Pass	Confirmed Fail
System ID	System Type	Qty	Rated Capacity (kBtu/h)		Economizer	Zone Name	Airflow (cfm)			Fan				
			Heating	Cooling			Design	Min.	Min. Ratio	BHP	Cycles	ECM Motor		
Zone_FC1-15-TRM	Uncontrolled	1	NA	NA	NA	1-Zone_FC1-1	2300	NA	NA	NA	NA	☐	☐	☐
Zone_FC1-217-TRM	Uncontrolled	1	NA	NA	NA	2-Zone_FC1-2	2300	NA	NA	NA	NA	☐	☐	☐
Zone_FC2-129-TRM	Uncontrolled	1	NA	NA	NA	3-Zone_FC2-1	989	NA	NA	NA	NA	☐	☐	☐
Zone_FC2-246-TRM	Uncontrolled	1	NA	NA	NA	4-Zone_FC2-2	989	NA	NA	NA	NA	☐	☐	☐
Zone_FC2-369-TRM	Uncontrolled	1	NA	NA	NA	5-Zone_FC2-3	989	NA	NA	NA	NA	☐	☐	☐
Zone_FC2-493-TRM	Uncontrolled	1	NA	NA	NA	6-Zone_FC2-4	989	NA	NA	NA	NA	☐	☐	☐
Zone_FC3-1105-TRM	Uncontrolled	1	NA	NA	NA	7-Zone_FC3-1	653	NA	NA	NA	NA	☐	☐	☐
Zone_FC3-2119-TRM	Uncontrolled	1	NA	NA	NA	8-Zone_FC3-2	653	NA	NA	NA	NA	☐	☐	☐
Zone_FC4-1152-TRM	Uncontrolled	1	NA	NA	NA	9-Zone_FC4-1	560	NA	NA	NA	NA	☐	☐	☐
Zone_FC5-1160-TRM	Uncontrolled	1	NA	NA	NA	10-Zone_FC5-1	495	NA	NA	NA	NA	☐	☐	☐

C. EXHAUST FAN SUMMARY

1.	2.	3.	4.	5.	Confirmed Pass	Confirmed Fail
System ID	Zone Name	Qty	CFM	BHP		
Zone_FC2-129	3-Zone_FC2-1	1	280	0.064	☐	☐

D. DHW EQUIPMENT SUMMARY – *(Adapted from NRCC-PLB-01)* — § 110.3

1.	2.	3.	4.	5.	6.	7.	8.	9.	10.	11.	12.	Confirmed Pass	Confirmed Fail
DHW Name	Fuel	Type	Qty	Distribution Type	Rated Input kBtuh	Efficiency	Pilot Energy (Btu/h)	External Tank Insulation	Vol	Standby Loss	Vol. Of Suppl. Storage Tank		
A O Smith Water Products2	NaturalGas	Storage	1	Nonrecirculating	75	Thrml. Eff: 0.800	0	NA	75	0.0244	NA	☐	☐

E. MULTI-FAMILY CENTRAL DHW SYSTEM DETAILS

This Section Does Not Apply

Project Name:	Butte Regional Transit Operations Center	NRCC-PRF-01-E	Page 18 of 21
Project Address:	326 Huss Lane Chico 95928	Calculation Date/Time:	13:18, Thu, Nov 05, 2015
Compliance Scope:	ExistingAlteration	Input File Name:	BRTOC_TI.xml

F. SOLAR HOT WATER HEATING SUMMARY (Adapted from NRCC-STH-01)

This Section Does Not Apply

G. MECHANICAL HVAC ACCEPTANCE TESTS & FORMS *(Adapted from 2013-NRCC-MCH-01-E)* — § RA4

Declaration of Required Acceptance Certificates (NRCA) – Acceptance Certificates that may be submitted. (Retain copies and verify forms are completed and signed to post in field for Field Inspector to verify).

Test Description	MCH-02A	MCH-03A	MCH-04A	MCH-05A	MCH-06A	MCH-07A	MCH-08A	MCH-09A	MCH-10A	MCH-11A	MCH-12A	MCH-13A	MCH-14A	MCH-15A	MCH-16A	MCH-17A	MCH-18A	Confirmed Pass	Confirmed Fail
Equipment Requiring Testing or Verification	# of units	Outdoor Air	Single Zone Unitary	Air Dist. Ducts	Economizer Controls	DCV	Supply Fan VAV	Valve Leakage	Supply Water Temp. Reset	Hrd. Variable Flow Control	Auto Demand Shed Control	FSD for SFI Units	Auto FSD for All Si Zone	Dist. Leakage Ctrl AC	TES Systems	Supply Air Temp. Reset	Condenser Water Reset Controls	ECA35		
BTROC1 - SHW	1	--	--	--	--	--	--	--	--	--	--	--	--	--	--	--	--	☐	☐
FC1-1_3	1	X	X	--	--	--	--	--	--	--	--	--	--	--	--	--	--	☐	☐
FC1-2_16	1	X	X	--	--	--	--	--	--	--	--	--	--	--	--	--	--	☐	☐
FC2-1_27	1	X	X	--	--	--	--	--	--	--	--	--	--	--	--	--	--	☐	☐
Zone_FC2-129	1	--	--	--	--	--	--	--	--	--	--	--	--	--	--	--	--	☐	☐
FC2-2_45	1	X	X	--	--	--	--	--	--	--	--	--	--	--	--	--	--	☐	☐
FC2-3_68	1	X	X	--	--	--	--	--	--	--	--	--	--	--	--	--	--	☐	☐
FC2-4_92	1	X	X	--	--	--	--	--	--	--	--	--	--	--	--	--	--	☐	☐
FC3-1_103	1	X	X	--	--	--	--	--	--	--	--	--	--	--	--	--	--	☐	☐
FC3-2_118	1	X	X	--	--	--	--	--	--	--	--	--	--	--	--	--	--	☐	☐
FC4-1_150	1	X	X	--	--	--	--	--	--	--	--	--	--	--	--	--	--	☐	☐
FC5-1_158	1	X	X	--	--	--	--	--	--	--	--	--	--	--	--	--	--	☐	☐

KITCHELL
Capital Expenditure Managers
2750 Gateway Oaks Drive
Suite 300
Sacramento, CA. 95833
(916) 648-9700

BCAG BUTTE COUNTY ASSOCIATION OF GOVERNMENTS

BUTTE REGIONAL TRANSIT OPERATIONS CENTER
326 HUSS LANE, CHICO CA

BUTTE COUNTY ASSOCIATION OF GOVERNMENTS

PROJECT STATUS:

BID SET

BUILDINGS:

SHEET TITLE:

MECHANICAL TITLE 24

SCALE: 0 1/2 1 BAR IS ONE INCH ON ORIGINAL DRAWING. IF NOT ONE INCH ON THIS SHEET, ADJUST SCALES ACCORDINGLY

REVISIONS

No.	Description	Date

JOB NO. 5006A3

DATE 12/3/15

SHEET M902

C:\BIM\BCAG TI_homberger.rvt

LAST REVISION: 11/30/2015 2:00:24 PM

Project Name:	Butte Regional Transit Operations Center	NRCC-PRF-01-E	Page 19 of 21
Project Address:	326 Huss Lane Chico 95928	Calculation Date/Time:	13:18, Thu, Nov 05, 2015
Compliance Scope:	ExistingAlteration	Input File Name:	BRTOC_TI.xml

NRCC-PRF-LTI-DETAILS -SECTION START-

A. INDOOR CONDITIONED LIGHTING CONTROL CREDITS (Adapted from NRCC-LTI-02-E)	**§ 140.6**
This Section Does Not Apply	

B. INDOOR CONDITIONED LIGHTING MANDATORY LIGHTING CONTROLS (Adapted from NRCC-LTI-02-E)	**§ 130.1**
This Section Does Not Apply	

§130.1(a) = Manual area controls; §130.1(b) = Multi Level; §130.1(c) = Auto Shut Off; §120.1(d) = Mandatory Daylight; §130.1(e) = Demand Responsive

C. TAILORED METHOD LIGHTING POWER ALLOWANCE SUMMARY AND CHECKLIST (Adapted from NRCC-LTI-04-E)	**§ 140.6**
General lighting power (see Table D)	0
General lighting power from special function areas (see Table E)	NA
Additional "use it or lose it" (See Table G)	0
Total watts	0

D. GENERAL LIGHTING POWER (Adapted from NRCC-LTI-04-E)	**§ 140.6-D**
This Section Does Not Apply	

E. GENERAL LIGHTING FROM SPECIAL FUNCTION AREAS (Adapted from NRCC-LTI-04-E) **§ 140.6(c) 3H**

Room Number	Primary Function Area	Illuminance Value (LUX)	Room Cavity Ratio (Table G)	Allowed LPD	Floor Area (ft²)	Allowed Watts	Confirmed	
							Pass	Fail
NA	NA	NA	NA	NA	NA	NA	☐	☐

Note: Tailored Method for Special Function Areas is not currently implemented

F. ROOM CAVITY RATIO (Adapted from NRCC-LTI-04-E)

Rectangular Spaces							
Room Number	Task/Activity Description	Room Length (ft)	Room Width (ft)	Room Cavity Height (ft)	RCR	Confirmed	
						Pass	Fail
NA	NA	NA	NA	NA	NA	☐	☐

Non-Rectangular Spaces
This Section Does Not Apply

Project Name:	Butte Regional Transit Operations Center	NRCC-PRF-01-E	Page 20 of 21
Project Address:	326 Huss Lane Chico 95928	Calculation Date/Time:	13:18, Thu, Nov 05, 2015
Compliance Scope:	ExistingAlteration	Input File Name:	BRTOC_TI.xml

Note: All applicable spaces are listed under the New Rectangular Spaces table

G. ADDITIONAL "USE IT OR LOSE IT" (Adapted from NRCC-LTI-04-E)

1.	2.	3.	4.	Allowed Watts	Confirmed	
Wall Display	**Combined Floor Display and Task Lighting**	**Combined Ornamental and Special Effects Lighting**	**Very Valuable Merchandise**		Pass	Fail
0	0	0	0	0	☐	☐

5. Wall Display
This Section Does Not Apply

6. Floor Display and Task Lighting
This Section Does Not Apply

7. Combined Ornamental and Special Effects Lighting
This Section Does Not Apply

8. Very Valuable Merchandise
This Section Does Not Apply

H. INDOOR & OUTDOOR LIGHTING ACCEPTANCE TESTS & FORMS (Adapted from NRCC-LTI-01-E and NRCC-LTO-01-E)	**§ 130.4**

Declaration of Required Acceptance Certificates (NRCA) –Acceptance Certificates that must be verified in the field. (Retain copies and verify forms are completed and signed to post in field for Field Inspector to verify).

Test Description		Indoor			Outdoor	Confirmed	
		NRCA-LTI-02-A	NRCA-LTI-03-A	NRCA-LTI-04-A	NRCA-LTO-02-A	Pass	Fail
Equipment Requiring Testing or Verification	# of units	Occ Sensors / Auto Time Switch	Auto Daylight	Demand Responsive	Outdoor Controls		
Occupant Sensors	1	☐	☐	☐	☐	☐	☐
Automatic Time Switch	0	☐	☐	☐	☐	☐	☐
Automatic Daylighting	1	☐	☐	☐	☐	☐	☐
Demand Responsive	1	☐	☐	☐	☐	☐	☐
Outdoor Controls	0	☐	☐	☐	☐	☐	☐

Project Name:	Butte Regional Transit Operations Center	NRCC-PRF-01-E	Page 21 of 21
Project Address:	326 Huss Lane Chico 95928	Calculation Date/Time:	13:18, Thu, Nov 05, 2015
Compliance Scope:	ExistingAlteration	Input File Name:	BRTOC_TI.xml

KITCHELL
Capital Expenditure Managers
2750 Gateway Oaks Drive
Suite 300
Sacramento, CA. 95833
(916) 648-9700

BCAG BUTTE COUNTY ASSOCIATION OF GOVERNMENTS

BUTTE REGIONAL TRANSIT OPERATIONS CENTER
326 HUSS LANE, CHICO CA

BUTTE COUNTY ASSOCIATION OF GOVERNMENTS

PROJECT STATUS:

BID SET

BUILDINGS:

SHEET TITLE:

MECHANICAL TITLE 24

SCALE: 0 1/2 1 BAR IS ONE INCH ON ORIGINAL DRAWING. IF NOT ONE INCH ON THIS SHEET, ADJUST SCALES ACCORDINGLY

REVISIONS

No.	Description	Date

JOB NO. 5006A3

DATE 12/3/15

SHEET M903

LAST REVISION: 11/30/2015 2:00:25 PM

C:\BIM\BCAG TI_homberger.rvt

MECHANICAL ABBREVIATIONS

SYMBOL	DESCRIPTION
AC	ABOVE CEILING
AFF	ABOVE FINISHED FLOOR
AFG	ABOVE FINISHED GRADE
ACCPNL	ACCESS PANEL
AWG	AMERICAN WIRE GAUGE
AIC	AMP INTERRUPTING CURRENT
A	AMPERE (AMPS)
AF	AMPS-FRAME
AT	AMPS-TRIP
ATS	AUTOMATIC TRANSFER SWITCH
BIL	BASIC IMPULSE LEVEL
BFG	BELOW FINISHED GRADE
BPT	BY-PASS TIMER
CAB	CABINET
CLG	CEILING
℄	CENTERLINE
CKT	CIRCUIT
CB	CIRCUIT BREAKER
CCTV	CLOSED CIRCUIT TELEVISION
CX	COAXIAL CABLE
COMM	COMMUNICATION
C	CONDUIT
CO	CONDUIT ONLY
CU	COPPER
DF	DRINKING FOUNTAIN
EWC	ELECTRIC WATER COOLER
EMT	ELECTRICAL METALLIC TUBING CONDUIT
EM	EMERGENCY
ENCL	ENCLOSURE
(ER)	EXISTING RELOCATE
FA	FIRE ALARM
FACP	FIRE ALARM CONTROL PANEL
FLEX	FLEXIBLE METAL CONDUIT
FLUOR	FLUORESCENT
FLA	FULL LOAD AMPS
FU	FUSE
F	FUSED
GALV	GALVANIZED
GRD/GND	GROUND
GFI	GROUND FAULT INTERRUPTER
GFR	GROUND FAULT RELAY
HZ	HERTZ
HID	HIGH INTENSITY DISCHARGE
HPS	HIGH PRESSURE SODIUM
HP	HORSEPOWER
JB	JUNCTION BOX
KA	KILOAMPERES
KV	KILOVOLT
KVA	KILOVOLT AMPERES
KW	KILOWATT
KWH	KILOWATT HOURS
KEC	KITCHEN EQUIPMENT CONTRACTOR
LT	LIGHT
LTG	LIGHTING
LRA	LOCKED ROTOR AMPS
LCL	LONG CONTINUOUS LOAD
LV	LOW VOLTAGE
MFR	MANUFACTURER
MATV	MASTER ANTENNA TELEVISION
MOM	MOMENTARY
M	MOTOR
MC	MOTOR CONTROLLER
MTD	MOUNTED
MTG	MOUNTING
NL	NIGHT LIGHT
NF	NON-FUSED
NOR	NORMAL
NC	NORMALLY CLOSED
NO	NORMALLY OPEN/NUMBER
#	NUMBER
PNL	PANEL
PH	PHASE
POC	POINT OF CONNECTION
P	POLE
PVC	POLYVINYL CHLORIDE DUCT
PWR	POWER
PF	POWER FACTOR
PRI	PRIMARY
PA	PUBLIC ADDRESS
PB	PULL BOX
REX	EXISTING TO BE RELOCATED
REFRIG	REFRIGERATOR
(R)	REMOVE
(RR)	REMOVE AND RELOCATE
RVS	REVERSE
RMC	RIGID METALLIC CONDUIT
RMS	ROOT MEAN SQUARE
SHT	SHEET
SPST	SINGLE POLE SINGLE THROW
SN	SOLID NEUTRAL
SSC	SOUND SYSTEM CABINET
SW	SWITCH
SWBD	SWITCHBOARD
SYM	SYMMETRICAL
TTB	TELEPHONE TERMINAL BOARD
TTC	TELEPHONE TERMINAL CABINET
KCMIL	THOUSAND CIRCULAR MILS
MCM	THOUSAND CIRCULAR MILS
TC	TIMECLOCK
XFMR	TRANSFORMER
TP	TWISTED PAIR
TPS	TWISTED PAIR SHIELDED
2SP	TWO SPEED
UG	UNDERGROUND
UPS	UNINTERRUPTIBLE POWER SYSTEM
V	VOLT
VA	VOLTAMPERES
WHM	WATT HOUR METER
WP	WEATHERPROOF
W	WIRE/WATTS
WAP	WIRELESS ACCESS POINT

POWER SYMBOLS

SYMBOL	DESCRIPTION
SB	MAIN SWITCHBOARD, DISTRIBUTION BOARD OR MOTOR CONTROL CENTER.
PP-1	PANELBOARD
	DUPLEX OUTLET, +18" UON.
	DUPLEX OUTLET, SPLIT WIRED.
	DUPLEX OUTLET, MOUNTED ABOVE COUNTER, +42", +46" WHERE BACKSPLASH OCCURS, UON.
G	DUPLEX OUTLET WITH GROUND FAULT INTERRUPTER.
	QUADRUPLEX OUTLET, +18" UON.
	SINGLE OUTLET, +18" UON.
	QUADRUPLEX OUTLET, MOUNTED IN FLUSH FLOOR BOX.
	DATA & QUADRUPLEX OUTLET, MOUNTED IN FLUSH FLOOR BOX.
	DISCONNECT SWITCH
J	JUNCTION BOX, 4' SQUARE UON FLOOR MOUNTED.
J	JUNCTION BOX, 4" SQUARE UON WALL MOUNTED.
J	JUNCTION BOX, 4" SQUARE UON CEILING MOUNTED.
	ELECTRIC MOTOR
	BUZZER
PE	PHOTOELECTRIC SWITCH
$	SWITCH, TOGGLE, SINGLE POLE, SINGLE THROW SUBSCRIPT MODIFIERS:
1,2	SWITCHING CIRCUIT
D	DIMMER
D3	THREE DIMMERS
DR	DOOR
K	KEY OPERATED
P	PILOT LIGHTED
T	TIMER
3	THREE WAY
4	FOUR WAY
OS/F	OCCUPANCY SENSOR FOR LIGHTING AND MECHANICAL FANS
OS	CEILING MOUNTED OCCUPANCY SENSOR.
T	THERMOSTAT
M	METER (WATT HOUR)

LIGHTING SYMBOLS

SYMBOL	DESCRIPTION
	LED FIXTURE, SURFACE OR RECESS MOUNTED.
	LED STRIPLIGHT FIXTURE, SURFACE OR PENDANT MOUNTED.
	LUMINAIRE FIXTURE, RECESSED IN CEILING
	LUMINAIRE FIXTURE, SURFACE OR PENDANT MOUNTED.
	LUMINAIRE WALL WASHER FIXTURE, RECESSED IN CEILING.
	EXIT FIXTURE
	EMERGENCY BATTERY PACK WITH TWO FLOOR HEADS
X	LIGHTING FIXTURE TYPE
	SPOT LIGHT
PP-1, 2	LIGHTING SWITCHING CIRCUIT, PANEL BOARD, CIRCUIT NUMBER.
CS	OCCUPANCY SENSOR
DS	DAYLIGHT SENSOR

FIRE ALARM SYMBOLS

SYMBOL	DESCRIPTION
D	SMOKE SENSING FIRE DETECTOR
F	FIRE ALARM HORN
H	HEAT DETECTOR
P	PULL STATION
F	FIRE ALARM HORN AND STROBE
SLC1-1	FIRE ALARM PANEL BOARD STRING - UNIT NUMBER

DATA SYMBOLS

SYMBOL	DESCRIPTION
	TELEPHONE TERMINAL BOARD, 4' x 8' x 3/4" UON.
	DATA OUTLET, +18" UON.
	DATA & QUADRUPLEX OUTLET, MOUNTED IN FLUSH FLOOR BOX.
	WIRELESS ACCESS POINT (WAP)

SECURITY SYMBOLS

SYMBOL	DESCRIPTION
CR	WALL MOUNTED CARD READER. PROVIDE JUNCTION BOX AND 3/4" CONDUIT TO SECURITY PANEL IN IDF.
	WALL MOUNTED DOOR POSITION SWITCH. PROVIDE JUNCTION BOX AND 3/4" CONDUIT TO SECURITY PANEL IN IDF.
	WALL MOUNTED MOTION DETECTOR. PROVIDE JUNCTION BOX AND 3/4" CONDUIT TO SECURITY PANEL IN IDF.
	SECURITY CAMERA. PROVIDE JUNCTION BOX AND 3/4" CONDUIT TO SECURITY PANEL IN IDF.

AUDIO / VISUAL SYMBOLS

SYMBOL	DESCRIPTION
S	CEILING MOUNTED SPEAKER
C	WALL CLOCK
	CAMERA

ELECTRICAL SYMBOLS

	SYMBOL	DESCRIPTION
MATCH LINE	1 / E101A / 1 / E101B	VIEW NUMBER / SHEET NUMBER; SHADED PORTION IS SIDE CONSIDERED
VIEW REFERENCE	1 / XXXX	VIEW NUMBER; SHEET NUMBER
DETAIL SECTION	1 / XXXX	SECTION IDENTIFIER; SHEET NUMBER
EQUIPMENT TAG	TYM / SEQ	MECHANICAL EQUIPMENT: SEE MECHANICAL DRAWINGS FOR EQUIPMENT INFORMATION.

RACEWAYS

SYMBOL	DESCRIPTION
	CONDUIT TURNED UP
	CONDUIT TURNED DOWN
	FLEXIBLE CONDUIT
	CONDUIT HOMERUN, CONTINUOUS RUN TO PANEL OR EQUIPMENT CABINET
	CONDUIT HOMERUN CONCEALED UNDER SLAB OR UNDERGROUND
	CONNECT TO GROUNDING ELECTRODE
	GROUNDING ROD

GENERAL NOTES:

1. PROVIDE AND LOCATE OUTLETS, WIRING AND CONTROLS, AS INDICATED OR REQUIRED FOR EQUIPMENT FURNISHED UNDER OTHER SECTIONS OR CONTRACTS PER EQUIPMENT SUPPLIERS REQUIREMENTS. CONNECT TO ALL EQUIPMENT AND ASSOCIATED CONTROLS, UNLESS OTHERWISE DIRECTED. VERIFY LOCATIONS, RATINGS, VOLTAGES, CONTROL WIRING, CONTROL DEVICES TO BE FURNISHED AND/OR INSTALLED WITH TRADE DRAWINGS AND SPECIFICATIONS. REFER TO EQUIPMENT OR SYSTEM SPECIFICATIONS REQUIRING ELECTRICAL WORK TO DETERMINE SCOPE OF WORK REQUIRED.
2. DO NOT CUT OR IN ANY WAY MODIFY ANY GIRT, BEAM OR OTHER STRUCTURAL MEMBER UNLESS SPECIFICALLY PREAPPROVED IN WRITING BY THE STRUCTURAL ENGINEER.
3. ALL NEW RACEWAYS AND WIRING SHALL BE CONCEALED IN WALLS AND CEILINGS UNLESS OTHERWISE INDICATED. PATCH AND REPAIR ANY WALLS AND CEILINGS DAMAGED BY THE INSTALLATION OF THE NEW RACEWAYS, WIRING AND DEVICES.
4. AN ELECTRICAL PERMIT IS REQUIRED BEFORE THE START OF ANY ELECTRICAL WORK. CONTRACTOR SHALL OBTAIN PERMIT AND PAY ALL ASSOCIATED FEES.
5. ALL ELECTRICAL WORK SHALL BE PERFORMED BY A C-10 LICENSED CONTRACTOR IN THE STATE OF CALIFORNIA.
6. ALL OUTDOOR ELECTRICAL EQUIPMENT AND ENCLOSURES SHALL BE NEMA 3R RATED.

KITCHELL
Capital Expenditure Managers
2750 Gateway Oaks Drive
Suite 300
Sacramento, CA. 95833
(916) 648-9700

BCAG BUTTE COUNTY ASSOCIATION OF GOVERNMENTS

BUTTE REGIONAL TRANSIT OPERATIONS CENTER
326 HUSS LANE, CHICO CA

BUTTE COUNTY ASSOCIATION OF GOVERNMENTS

PROJECT STATUS:
BID SET
BUILDINGS:

SHEET TITLE:
ELECTRICAL ABBREVIATIONS, SYMBOLS, & NOTES

SCALE: 0 1/2 1 BAR IS ONE INCH ON ORIGINAL DRAWING. IF NOT ONE INCH ON THIS SHEET, ADJUST SCALES ACCORDINGLY

REVISIONS

No.	Description	Date

JOB NO. 5006A3
DATE 12/3/15
SHEET E001

LAST REVISION: 11/30/2015 1:59:44 PM

C:\BIM\BCAG TI_hornberger.rvt

KEYNOTES

1. POINT OF INTERCONNECTION BETWEEN THIS CONTRACTOR AND (E) PROJECT CONTRACTOR SHALL BE AT A PULLBOX LOCATED 5'-0" OUTSIDE THIS BUILDING. PROVIDE ONE PULLBOX FOR POWER, ONE PULLBOX FOR SECURITY/FIRE ALARM, AND ONE PULLBOX FOR TELEPHONE/DATA.
2. (E) CONDUITS AND CABLE PROVIDED BY (E) PROJECT CONTRACTOR. (E) PROJECT CONTRACTOR SHALL EXTEND CONDUCTORS TO POINT OF INTERCONNECTION AND COIL INSIDE PULLBOX FOR TERMINATION BY THIS CONTRACTOR.
3. (E) SITE LIGHTING TO REMAIN. EXTEND (E) CONDUCTORS TO (N) CIRCUIT IN PANEL LA VIA LIGHTING CONTROL PANEL "LCP". VERIFY VOLTAGE IN FIELD.
4. ROUTE POWER CONDUIT TO PANEL LB. ROUTE ACCESS CONTROL CONDUITS TO IDF ROOM.

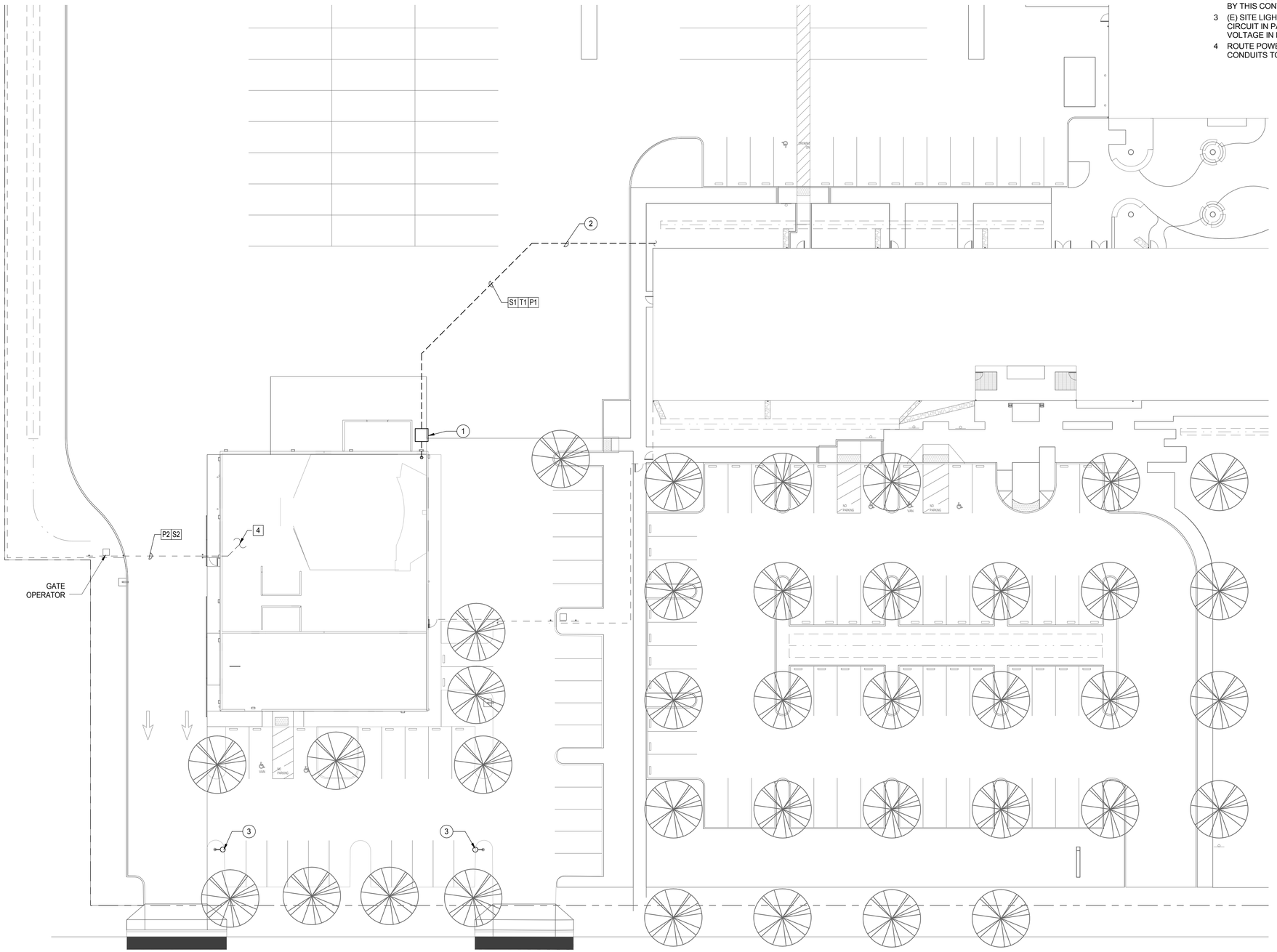

LEGEND:

P1	1 - 3" C FOR POWER
P2	1 - 1"C FOR GATE POWER CIRCUIT. PROVIDE 2#10 AND 1#10 GND.
S1	1 - 2" C FOR SECURITY 1 - 2" C FOR FIRE ALARM 1 - 2" C SPARE
S2	ACCESS CONTROL SITE CONDUIT- 2-1"C. WIRING PER SECURITY / ACCESS CONTROL VENDOR REQUIREMENTS.
T1	1 - 2" C FOR TELEPHONE/DATA 1 - 2" C SPARE

1 ELECTRICAL SITE PLAN
1" = 20'-0"

KITCHELL
Capital Expenditure Managers
2750 Gateway Oaks Drive
Suite 300
Sacramento, CA. 95833
(916) 648-9700

BCAG BUTTE COUNTY ASSOCIATION OF GOVERNMENTS

BUTTE REGIONAL TRANSIT OPERATIONS CENTER
326 HUSS LANE, CHICO CA

BUTTE COUNTY ASSOCIATION OF GOVERNMENTS

PROJECT STATUS:
BID SET
BUILDINGS:

SHEET TITLE:
ELECTRICAL SITE PLAN

SCALE: 0 1/2 1 — BAR IS ONE INCH ON ORIGINAL DRAWING. IF NOT ONE INCH ON THIS SHEET, ADJUST SCALES ACCORDINGLY

REVISIONS

No.	Description	Date

JOB NO. 5006A3
DATE 12/3/15
SHEET E100

LAST REVISION: 11/30/2015 1:59:46 PM

C:\BIM\BCAG TI_homberger.rvt

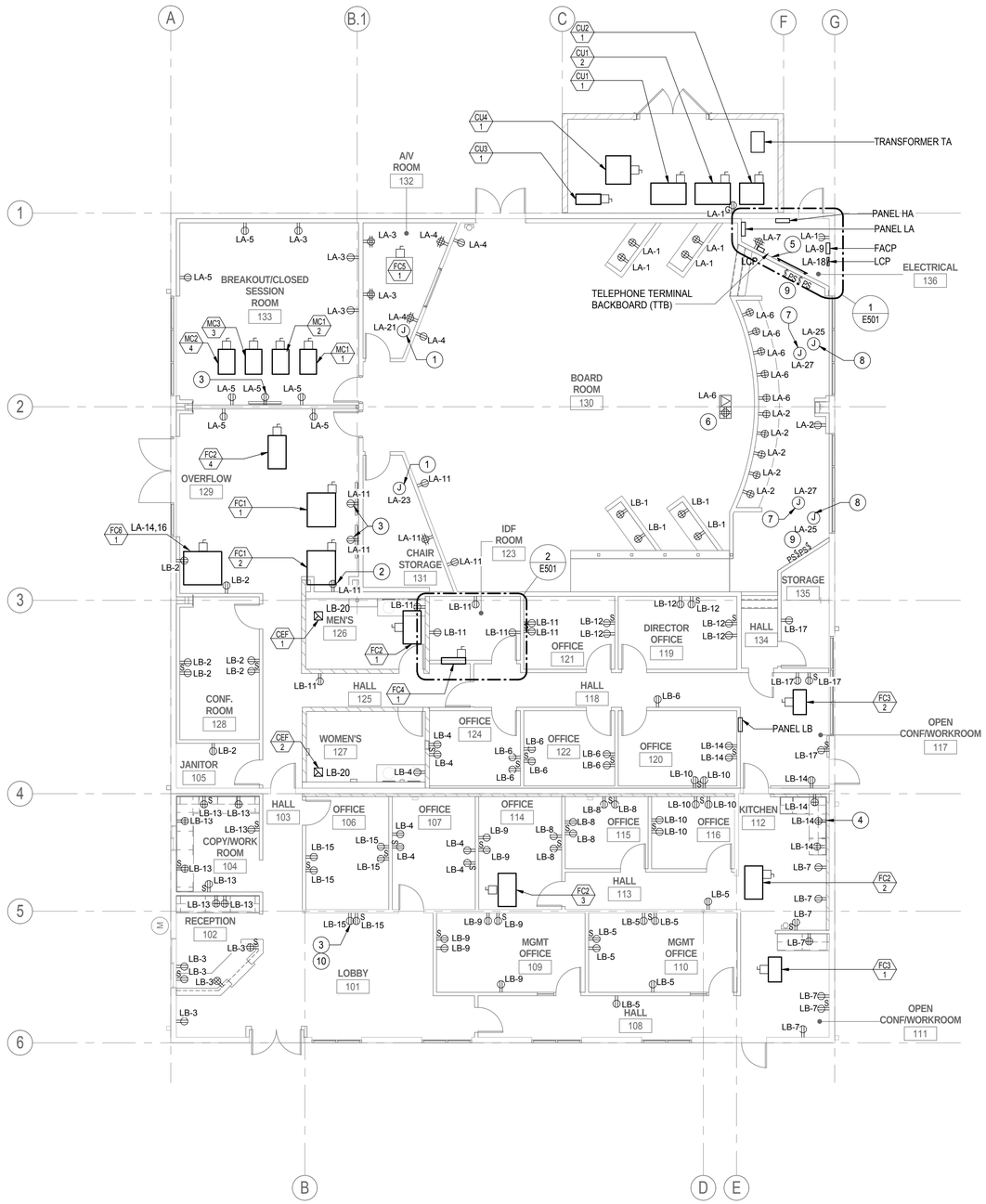

1 ELECTRICAL POWER PLAN
1/8" = 1'-0"

KEYNOTES

1 PROVIDE POWER FOR PROJECTOR.
2 PROVIDE RECEPTACLE FOR DRINKING FOUNTAIN. MOUNT BEHIND DRINKING FOUNTAIN COVER PLATE.
3 RECEPTACLE SHALL BE RECESSED INTO WALL BEHIND MONITOR.
4 PROVIDE RECEPTACLE UNDER SINK FOR GARBAGE DISPOSAL. PROVIDE SWITCH ABOVE COUNTER.
5 PROVIDE 2 - 2" CONDUIT TO IDF ROOM 123.
6 PROVE 2 - 1" CONDUIT TO FLOOR BOX - ONE FOR POWER & ONE FOR DATA. FLOOR BOX SHALL BE WIREMOLD EFB6S, 6 GANG.
7 PROVIDE JUNCTION BOX AT CEILING FOR MOTORIZED SCREEN. PROVIDE SWITCH AS INDICATED IN KEYNOTE #9. PROVIDE CABLING FROM SWITCH TO SCREEN MOTOR.
8 PROVIDE POWER FOR MOTORIZED BLIND @ +14'-6" AFF. PROVIDE CONTROLLER PER KEYNOTE #9. PROVIDE CABLING FROM CONTROLLER TO MOTOR PER MANUFACTURER'S REQUIREMENTS.
9 LOCATION OF SWITCH FOR MOTORIZED PROJECTOR SCREEN AND CONTROLLER FOR MECHANICAL SHADES. PROVIDE SWITCH AND CONTROLLER AS REQUIRED BY BLIND AND SCREEN MANUFACTURER.
10

GENERAL NOTES:
1. DUPLEX RECEPTACLES DENOTED WITH AN "S" ARE SWITCHED BY AN AUXILIARY RELAY CONTROLLED BY THE LIGHTING SYSTEM OCCUPANCY SENSOR WITHIN THE SPACE. REFER TO DETAIL1/E803.

HVAC SCHEDULE

UNIT TAG	ELECTRICAL RATING	DISCONNECT SWITCH SIZE	FUSE SIZE	WIRING SIZE
CU1-1	26.4A, 480V, 3-PHASE	3P, 60A DISCONNECT SWITCH	40A	1"C W/3#8, #10 GND
CU1-2	19A, 480V, 3-PHASE	3P, 30A DISCONNECT SWITCH	30A	3/4"C W/3#12, #10 GND
CU2-1	16.4A, 480V, 3-PHASE	3P, 30A DISCONNECT SWITCH	25A	3/4"C W/3#12, #12 GND
CU3-1	3.75A, 208V, 1-PHASE	3P, 30A DISCONNECT SWITCH	15A	3/4"C W/2#12, #10 GND
CU4-1	25.8A, 480V, 3-PHASE	3P, 30A DISCONNECT SWITCH	40A	1"C W/3#8, #10 GND
MCU1-1	0.26A, 208V, 1-PHASE	2P, 30A DISCONNECT SWITCH	15A	3/4"C W/2#10, #10 GND
MCU1-2	0.26A, 208V, 1-PHASE	2P, 30A DISCONNECT SWITCH	15A	3/4"C W/2#10, #10 GND
MCU3-3	0.26A, 208V, 1-PHASE	2P, 30A DISCONNECT SWITCH	15A	3/4"C W/2#10, #10 GND
MCU2-4	0.26A, 208V, 1-PHASE	2P, 30A DISCONNECT SWITCH	15A	3/4"C W/2#10, #10 GND
FC1-1	2.5A, 208V, 1-PHASE	2P, 30A DISCONNECT SWITCH	15A	3/4"C W/2#10, #10 GND
FC1-2	2.5A, 208V, 1-PHASE	2P, 30A DISCONNECT SWITCH	15A	3/4"C W/2#10, #10 GND
FC2-1	1A, 208V, 1-PHASE	2P, 30A DISCONNECT SWITCH	15A	3/4"C W/2#10, #10 GND
FC2-2	1A, 208V, 1-PHASE	2P, 30A DISCONNECT SWITCH	15A	3/4"C W/2#10, #10 GND
FC2-3	1A, 208V, 1-PHASE	2P, 30A DISCONNECT SWITCH	15A	3/4"C W/2#10, #10 GND
FC2-4	1A, 208V, 1-PHASE	2P, 30A DISCONNECT SWITCH	15A	3/4"C W/2#10, #10 GND
FC3-1	1A, 208V, 1-PHASE	2P, 30A DISCONNECT SWITCH	15A	3/4"C W/2#10, #10 GND
FC3-2	1A, 208V, 1-PHASE	2P, 30A DISCONNECT SWITCH	15A	3/4"C W/2#10, #10 GND
FC4-1	7A, 208V, 1-PHASE	2P, 30A DISCONNECT SWITCH	15A	3/4"C W/2#10, #10 GND
FC5-1	0.15A, 208V, 1-PHASE	2P, 30A DISCONNECT SWITCH	15A	3/4"C W/2#10, #10 GND
FC6-1	6.6A, 208V, 1-PHASE	2P, 30A DISCONNECT SWITCH	15A	3/4"C W/2#10, #10 GND

KITCHELL
Capital Expenditure Managers
2750 Gateway Oaks Drive
Suite 300
Sacramento, CA. 95833
(916) 648-9700

BCAG BUTTE COUNTY ASSOCIATION OF GOVERNMENTS

BUTTE REGIONAL TRANSIT OPERATIONS CENTER
326 HUSS LANE, CHICO CA

BUTTE COUNTY ASSOCIATION OF GOVERNMENTS

PROJECT STATUS:
BID SET
BUILDINGS:

SHEET TITLE:
ELECTRICAL POWER PLAN

SCALE: 0 1/2 1 BAR IS ONE INCH ON ORIGINAL DRAWING. IF NOT ONE INCH ON THIS SHEET, ADJUST SCALES ACCORDINGLY

REVISIONS

No.	Description	Date

JOB NO. 5006A3
DATE 12/3/15
SHEET E201

LAST REVISION: 11/30/2015 1:59:47 PM

C:\BIM\BCAG TI_hornberger.rvt

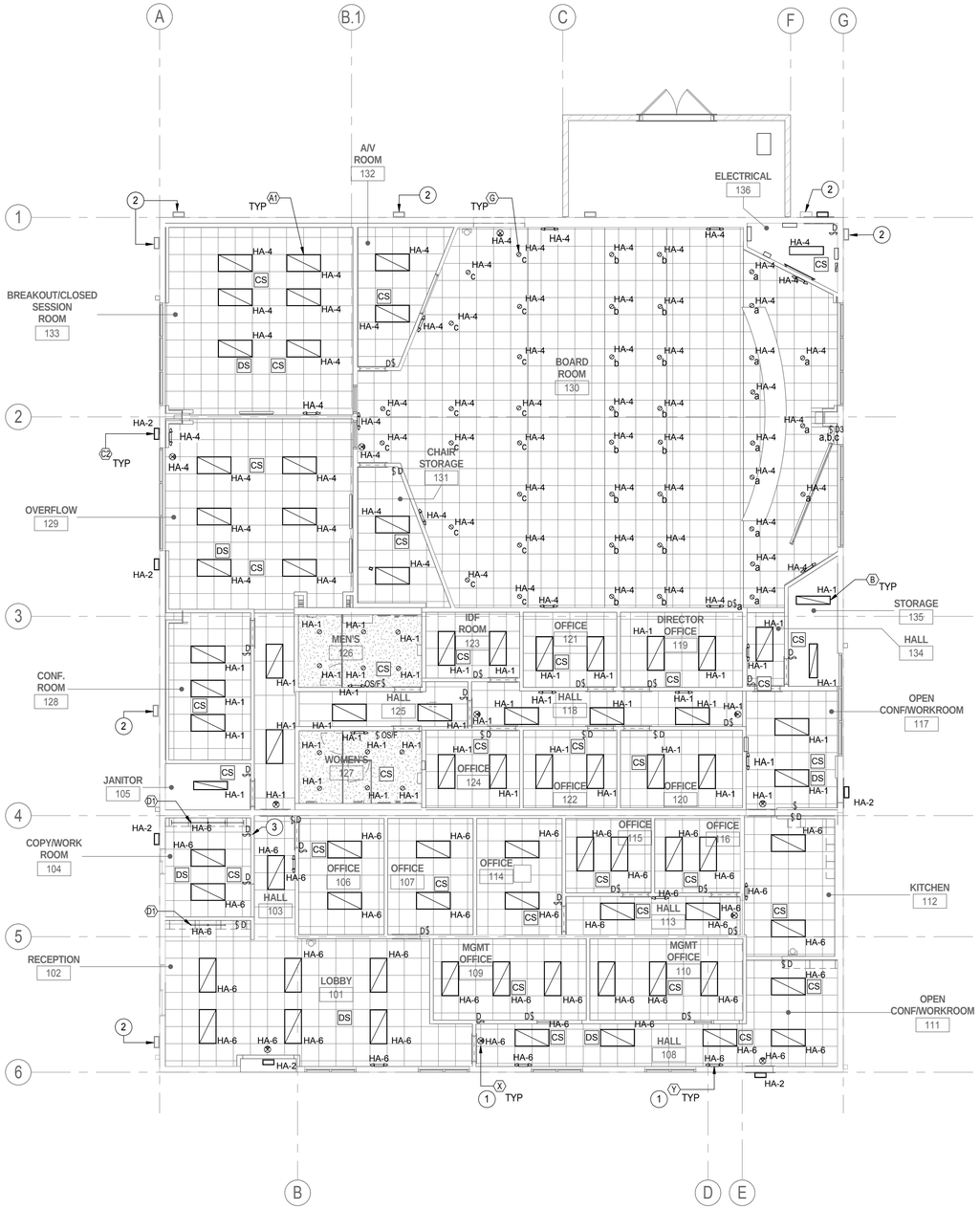

1 ELECTRICAL LIGHTING PLAN
1/8" = 1'-0"

KEYNOTES

1 EXIT AND EMERGENCY FIXTURES SHALL BE UNSWITCHED.
2 (E) LIGHTING FIXTURE TO REMAIN. VERIFY VOLTAGE IN FIELD. EXTEND (E) CONDUCTORS TO (N) CIRCUITS IN PANEL "LA" VIA LIGHTING CONTROL PANEL "LCP".
3 LINE VOLTAGE SWITCH FOR CONTROL OF UNDERCABINET LIGHTING.

GENERAL NOTES:

1. REFER TO SHEET E901 FOR LIGHTING CONTROL AND RELAY SCHEDULES. REFER TO SHEET E803 FOR LIGHTING FIXTURE SCHEDULE AND SWITCHING DIAGRAM.

KITCHELL
Capital Expenditure Managers
2750 Gateway Oaks Drive
Suite 300
Sacramento, CA. 95833
(916) 648-9700

BCAG BUTTE COUNTY ASSOCIATION OF GOVERNMENTS

BUTTE REGIONAL TRANSIT OPERATIONS CENTER
326 HUSS LANE, CHICO CA

BUTTE COUNTY ASSOCIATION OF GOVERNMENTS

PROJECT STATUS:
BID SET
BUILDINGS:

SHEET TITLE:
ELECTRICAL LIGHTING PLAN

SCALE: 0 1/2 1 — BAR IS ONE INCH ON ORIGINAL DRAWING. IF NOT ONE INCH ON THIS SHEET, ADJUST SCALES ACCORDINGLY

REVISIONS

No.	Description	Date

JOB NO. 5006A3
DATE 12/3/15
SHEET E202

LAST REVISION: 11/30/2015 1:59:49 PM

C:\BIM\BCAG TI_homberger.rvt

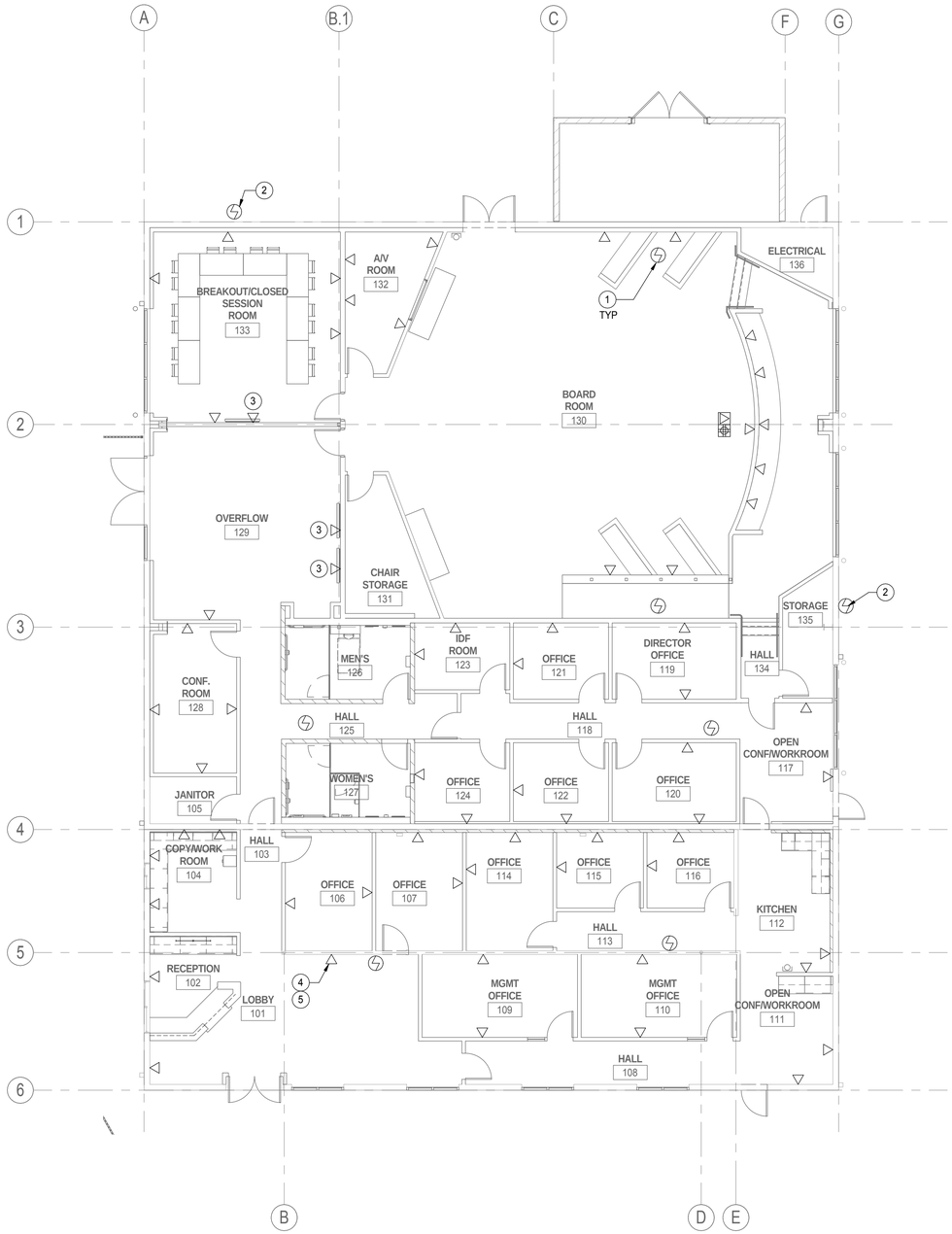

1 ELECTRICAL DATA PLAN
1/8" = 1'-0"

KEYNOTES

1 PROVIDE A CAT6 CABLE TO WIRELESS ACCESS POINT FROM SERVER.
2 EXTERIOR WIRELESS ACCESS POINT. PROVIDE A CAT6 CABLE FROM SERVER TO AN EXTERNALLY MOUNTED JUNCTION BOX WITH WATERPROOF COVER. BOX TO BE LOCATED 1'-0" BELOW TOP OF EXTERIOR WALL. PROVIDE 1#6 AWG COPPER CONDUCTOR TO NEAREST GROUND.
3 MOUNT DATA OUTLET RECESSED BEHIND MONITOR.
4 OUTLET SHALL BE RECESSED INTO WALL BEHIND MONITOR.
5 PROVIDE COVER SAME COLOR AS WALL.

GENERAL NOTES:

1. REFER TO DETAIL 1/E802 FOR DATA SYSTEM RISER DIAGRAM

KITCHELL
Capital Expenditure Managers
2750 Gateway Oaks Drive
Suite 300
Sacramento, CA. 95833
(916) 648-9700

BCAG BUTTE COUNTY ASSOCIATION OF GOVERNMENTS

BUTTE REGIONAL TRANSIT OPERATIONS CENTER
326 HUSS LANE, CHICO CA

BUTTE COUNTY ASSOCIATION OF GOVERNMENTS

PROJECT STATUS:
BID SET
BUILDINGS:

SHEET TITLE:
ELECTRICAL DATA PLAN

SCALE: 0 1/2 1 BAR IS ONE INCH ON ORIGINAL DRAWING. IF NOT ONE INCH ON THIS SHEET, ADJUST SCALES ACCORDINGLY

REVISIONS

No.	Description	Date

JOB NO. 5006A3
DATE 12/3/15
SHEET E203

C:\BIM\BCAG TI_hornberger.rvt

LAST REVISION: 11/30/2015 1:59:51 PM

GENERAL NOTES:

1. PROVIDE A COMPLETE AND OPERABLE FIRE ALARM SYSTEM DESIGN AS A DEFERRED SUBMITTAL BASED ON SPECIFICATION SECTION 283111 AND DEVICE LOCATION INTENT SHOWN HERE.

2. SEE SHEET E804 FOR FIRE ALARM RISER DIAGRAM.

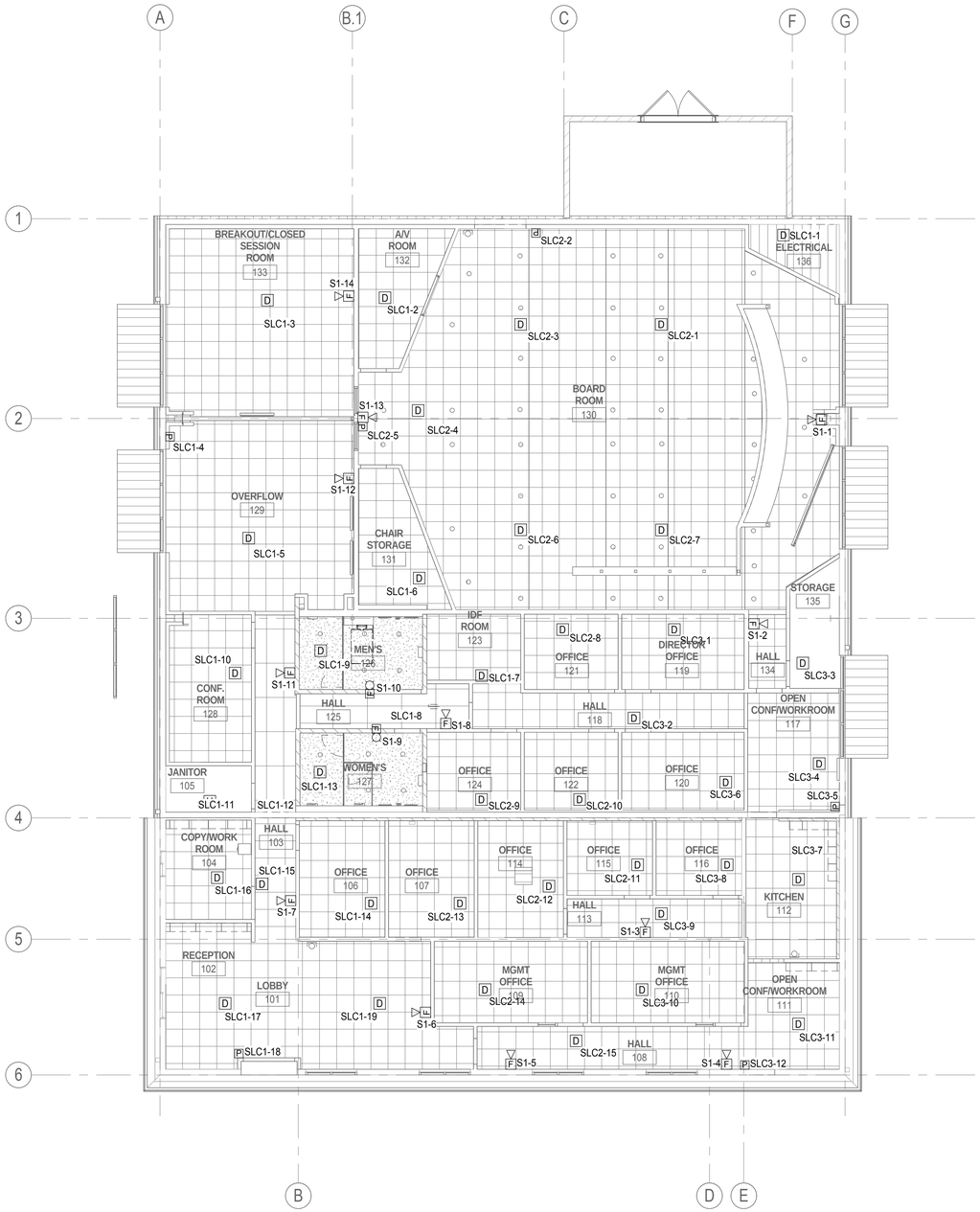

1 FIRE ALARM PLAN
1/8" = 1'-0"

KITCHELL
Capital Expenditure Managers
2750 Gateway Oaks Drive
Suite 300
Sacramento, CA. 95833
(916) 648-9700

BCAG BUTTE COUNTY ASSOCIATION OF GOVERNMENTS

BUTTE REGIONAL TRANSIT OPERATIONS CENTER
326 HUSS LANE, CHICO CA

BUTTE COUNTY ASSOCIATION OF GOVERNMENTS

PROJECT STATUS:
BID SET

BUILDINGS:

SHEET TITLE:
FIRE ALARM PLAN

SCALE: 0 1/2 1 BAR IS ONE INCH ON ORIGINAL DRAWING. IF NOT ONE INCH ON THIS SHEET, ADJUST SCALES ACCORDINGLY

REVISIONS

No.	Description	Date

JOB NO. 5006A3
DATE 12/3/15
SHEET E204

C:\BIM\BCAG TI_hornberger.rvt

LAST REVISION: 11/30/2015 1:59:52 PM

GENERAL NOTES:

1. SECURITY AND A/V DEVICES PROVIDED BY OTHERS. CONTRACTOR TO PROVIDE ALL CONDUIT, CABLE AND BOXES AS REQUIRED FOR A COMPLETE AND OPERABLE SYSTEM. REFER TO SPECIFICATION SECTIONS 274100 AND 281300 FOR ADDITIONAL INFORMATION.

(#) KEYNOTES

1 PROVIDE CLOCK.
2 PROVIDE ASSISTED LISTENEING SYSTEM IN AREA - LISTEN TECHNOLOGIES LS-02-072.

1 SECURITY PLAN
1/8" = 1'-0"

2 A/V PLAN
1/8" = 1'-0"

KITCHELL
Capital Expenditure Managers
2750 Gateway Oaks Drive
Suite 300
Sacramento, CA. 95833
(916) 648-9700

BUTTE REGIONAL TRANSIT OPERATIONS CENTER
326 HUSS LANE, CHICO CA

BCAG BUTTE COUNTY ASSOCIATION OF GOVERNMENTS

BUTTE COUNTY ASSOCIATION OF GOVERNMENTS

PROJECT STATUS:
BID SET

BUILDINGS:

SHEET TITLE:
SECURITY & A/V PLANS

SCALE: 0 1/2 1 BAR IS ONE INCH ON ORIGINAL DRAWING. IF NOT ONE INCH ON THIS SHEET, ADJUST SCALES ACCORDINGLY

REVISIONS

No.	Description	Date

JOB NO. 5006A3
DATE 12/3/15
SHEET E205

LAST REVISION: 11/30/2015 1:59:54 PM

C:\BIM\BCAG TI_homberger.rvt

(#) **KEYNOTES**

1 PROVIDE WATTSTOPPER LC8-120/277 LIGHTING CONTROL PANEL WITH RELAYS AS NEEDED FOR ALL EXTERIOR LIGHTING CIRCUITS. PROVIDE PHOTOCELL ON ROOF FACING NORTH.

2 PROVIDE NEMA 6-30R RECEPTACLE MOUNTED ON SIDE OF CABLE TRAY. PROVIDE 2#10 AND 1#12 GND IN 3/4"C TO PANEL.

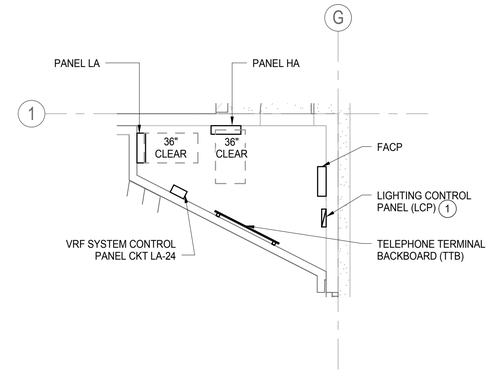

1 ENLARGED - ELECTRICAL ROOM
1/4" = 1'-0"

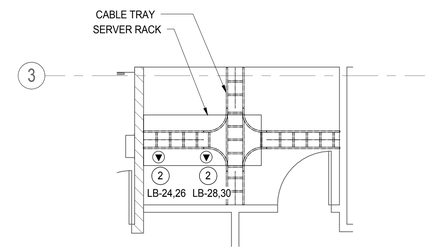

2 ENLARGED - SERVER ROOM
1/4" = 1'-0"

KITCHELL
Capital Expenditure Managers
2750 Gateway Oaks Drive
Suite 300
Sacramento, CA. 95833
(916) 648-9700

BCAG BUTTE COUNTY ASSOCIATION OF GOVERNMENTS

BUTTE REGIONAL TRANSIT OPERATIONS CENTER
326 HUSS LANE, CHICO CA

BUTTE COUNTY ASSOCIATION OF GOVERNMENTS

PROJECT STATUS:
BID SET
BUILDINGS:

SHEET TITLE:
ENLARGED POWER PLANS

SCALE: 0 1/2 1 BAR IS ONE INCH ON ORIGINAL DRAWING. IF NOT ONE INCH ON THIS SHEET, ADJUST SCALES ACCORDINGLY

REVISIONS

No.	Description	Date

JOB NO. 5006A3
DATE 12/3/15
SHEET E501

C:\BIM\BCAG TI_hornberger.rvt

LAST REVISION: 11/30/2015 1:59:55 PM

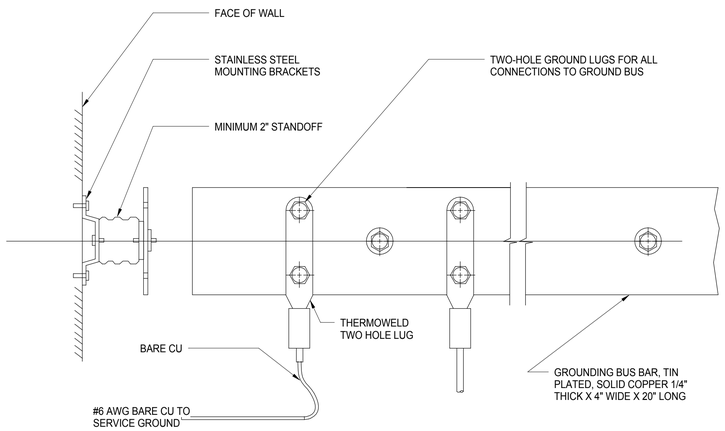

NOTE:
1. PROVIDE CPI CHATSWORTH 40153-020 OR EQUAL.

3 — TELECOM GROUNDING AT TTB AND IDF
NTS

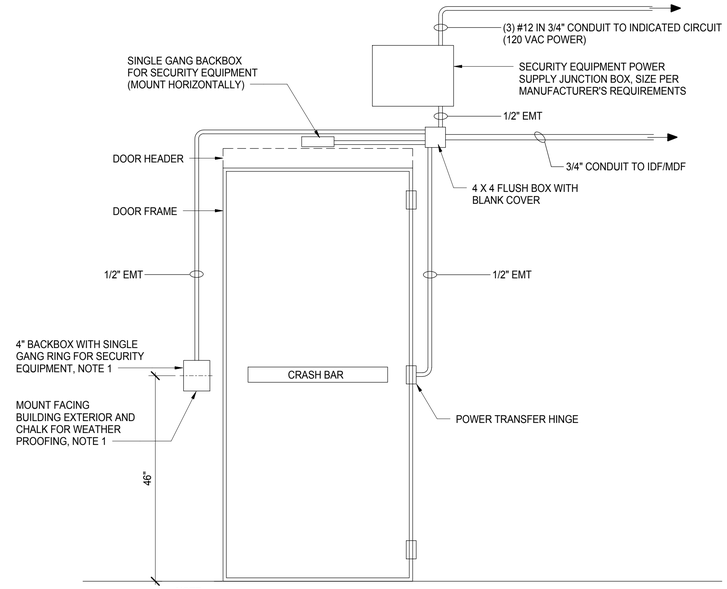

NOTE:
1. WHERE BOXES ARE MOUNTED IN CMU, COORDINATE CUT INTO CMU INSTALLATION. ALL BOXES TO BE FLUSH MOUNT.

1 — EXTERIOR DOOR ELECTRONIC ACCESS HARDWARE
NTS

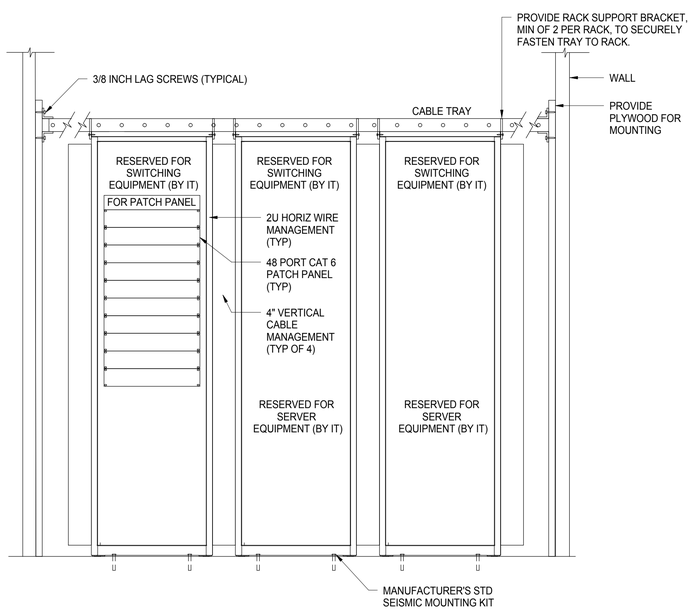

4 — IDF ELEVATION
NTS

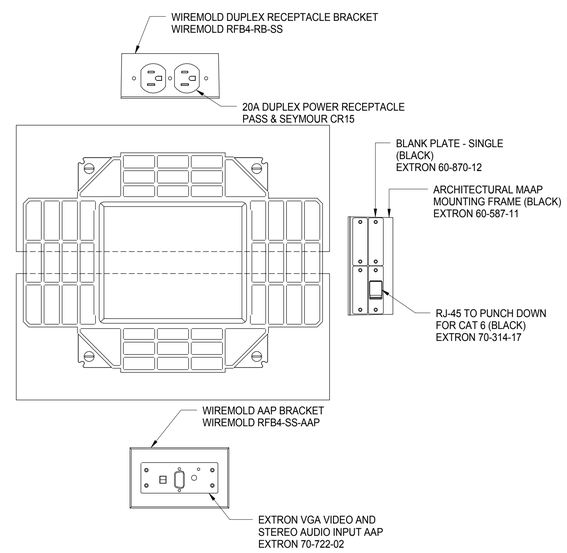

2 — FLOOR BOX DETAIL
NTS

KITCHELL
Capital Expenditure Managers
2750 Gateway Oaks Drive
Suite 300
Sacramento, CA. 95833
(916) 648-9700

BCAG BUTTE COUNTY ASSOCIATION OF GOVERNMENTS

BUTTE REGIONAL TRANSIT OPERATIONS CENTER
326 HUSS LANE, CHICO CA

BUTTE COUNTY ASSOCIATION OF GOVERNMENTS

PROJECT STATUS:
BID SET
BUILDINGS:

SHEET TITLE:
ELECTRICAL DETAILS

SCALE: 0 1/2 1 BAR IS ONE INCH ON ORIGINAL DRAWING. IF NOT ONE INCH ON THIS SHEET, ADJUST SCALES ACCORDINGLY

REVISIONS

No.	Description	Date

JOB NO. 5006A3
DATE 12/3/15
SHEET E701

C:\BIM\BCAG TI_hornberger.rvt

LAST REVISION: 11/30/2015 1:59:56 PM

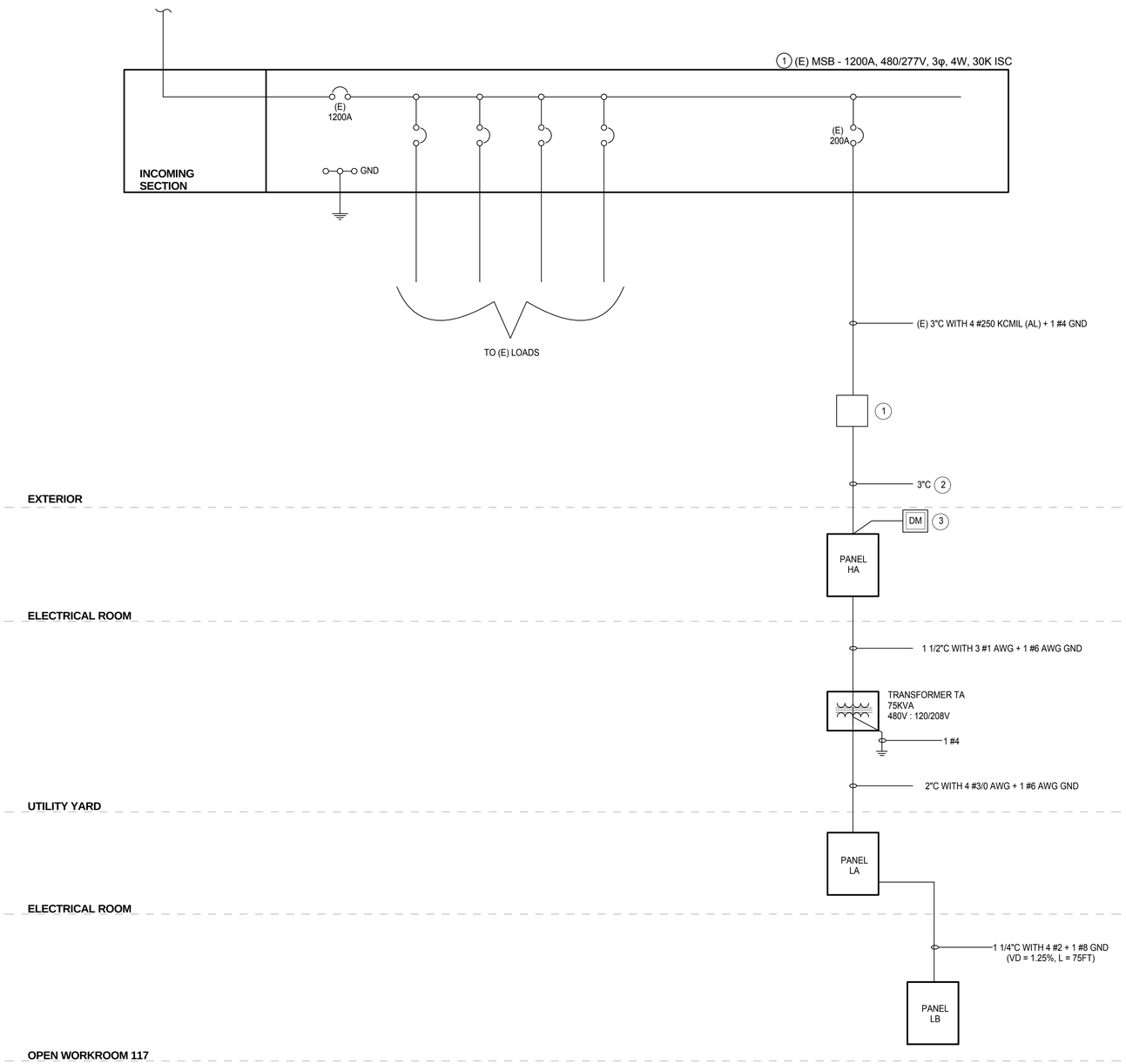

1 SINGLE LINE DIAGRAM
NTS

KEYNOTES

1. POINT OF INTERCONNECTION BETWEEN THIS CONTRACTOR AND (E) PROJECT CONTRACTOR SHALL BE AT A PULLBOX LOCATED 5'-0" OUTSIDE THIS BUILDING. PULLBOX PROVIDED BY THIS CONTRACTOR. ESLD
2. (E) PROJECT CONTRACTOR SHALL EXTEND CONDUCTORS TO PANEL HA IN CONDUIT PROVIDED BY THIS CONTRACTOR. FINAL CONNECTION OF CONDUCTORS AT PANEL HA SHALL BE BY THIS CONTRACTOR.
3. PROVIDE 480-VOLT, 3-PHASE BUILDING ENERGY METER, EMON DMON MODEL E50 WITH INTEGRAL BACNET INTERFACE AND CURREN TRANSFORMERS SIZEDTO MATCH MAIN CIRCUIT BREAKER. MOUNT CURRENT TRANSFORMERS IN PANEL "HA" AND PROVIDE MANUFACTURER SPECIFIED CT WIRING IN 1/2" CONDUIT TO METER. PROVIDE 1#18 AWG TSP IN 1/2" CONDUIT FROM METER TO BMS CONTROL PANEL.

GENERAL NOTES:

1. ALL WIRING SHALL BE COPPER, UNLESS INDICATED OTHERWISE.

KITCHELL
Capital Expenditure Managers
2750 Gateway Oaks Drive
Suite 300
Sacramento, CA. 95833
(916) 648-9700

BCAG BUTTE COUNTY ASSOCIATION OF GOVERNMENTS

BUTTE REGIONAL TRANSIT OPERATIONS CENTER
326 HUSS LANE, CHICO CA

BUTTE COUNTY ASSOCIATION OF GOVERNMENTS

PROJECT STATUS:
BID SET
BUILDINGS:

SHEET TITLE:
ELECTRICAL SINGLE LINE DIAGRAM

SCALE: 0 1/2 1 BAR IS ONE INCH ON ORIGINAL DRAWING. IF NOT ONE INCH ON THIS SHEET, ADJUST SCALES ACCORDINGLY

REVISIONS

No.	Description	Date

JOB NO. 5006A3
DATE 12/3/15
SHEET E801

LAST REVISION: 11/30/2015 1:59:57 PM

C:\BIM\BCAG TI_homberger.rvt

NOTES:

1. SEE SITE PLAN AND SPECIFICATIONS FOR BACKBONE CABLE TYPES.
2. ALL STATION CABLING TO BE CAT-6 UTP IN CONDUIT.
3. ALL CABLING ROUTED UNDERGROUND SHALL BE LISTED FOR USE IN A WET ENVIRONMENT.
4. PROVIDE CAT6 MODULAR PATCH FIELDS IN RACK FOR TELECOM CABLING.
5. ACTIVE COMPONENTS (SERVERS, SWITCHES, ROUTERS, ETC.) ARE BY OWNER IT AND NOT SHOWN HERE FOR CLARITY.

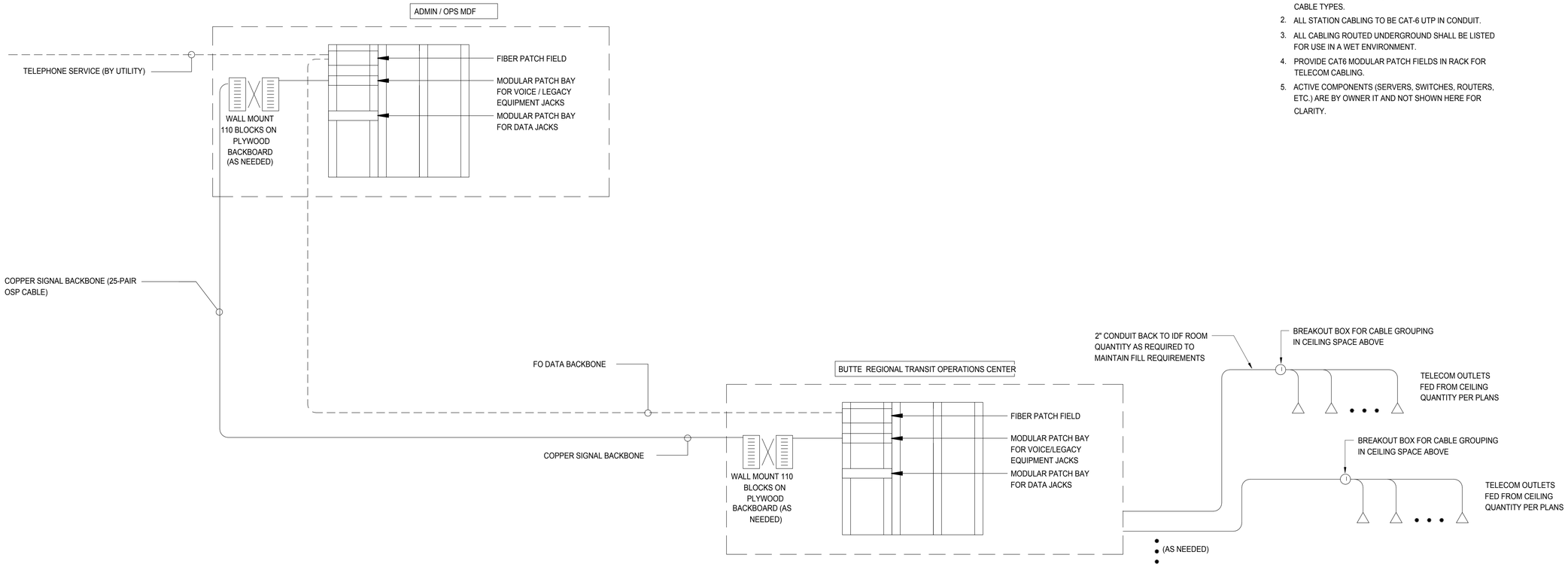

1 DATA SYSTEM RISER DIAGRAM
NTS

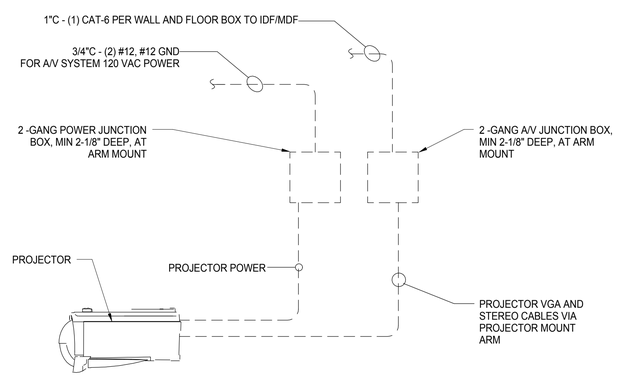

2 PROJECTOR BLOCK DIAGRAM
NTS

KITCHELL
Capital Expenditure Managers
2750 Gateway Oaks Drive
Suite 300
Sacramento, CA. 95833
(916) 648-9700

BCAG BUTTE COUNTY ASSOCIATION OF GOVERNMENTS

BUTTE REGIONAL TRANSIT OPERATIONS CENTER
326 HUSS LANE, CHICO CA

BUTTE COUNTY ASSOCIATION OF GOVERNMENTS

PROJECT STATUS:
BID SET
BUILDINGS:

SHEET TITLE:
LOW VOLTAGE SINGLE LINE DIAGRAMS

SCALE: 0 1/2 1 BAR IS ONE INCH ON ORIGINAL DRAWING. IF NOT ONE INCH ON THIS SHEET, ADJUST SCALES ACCORDINGLY

REVISIONS

No.	Description	Date

JOB NO. 5006A3
DATE 12/3/15
SHEET E802

C:\BIM\BCAG TI_hornberger.rvt

LAST REVISION: 11/30/2015 1:59:58 PM

LIGHTING FIXTURE SCHEDULE

TYPE	DESCTRIPTION	MFR	MODEL	LAMP TYPE	LAMP STYLE	COLOR TEMP	BALLAST TYPE	FIXTURE WATTS	MONITORING	NOTES
A1	2 X 4 ARCHITECTURAL GRID LED	CREE	ZR24, 2'X4' LED TROFFER	LED	LED	3500K	ELECTRONIC DRIVER	44	RECESSED - GRID	PROVIDE LUTRON ECOSYSTEM 0-10V INTERFACE
B	CHAIN HUNG 1 X 4 LINEAR	CREE	CRLE-40L-35K-LES	LED	LED	3500K	ELECTRONIC DRIVER	44	CHAIN HUNG	PROVIDE W/ INTEGRAL LUTRON ECOSYSTEM INTERFACE
C2	OUTDOOR LED WALL MOUNT	KIM	SAR-3-E35-60L-4K-277-SG-1W-SF-SCL	LED	LED	4200K DIMMABLE	ELECTRONIC DRIVER	66	WALL MOUNTED	PROVIDE INTEGRAL OCCUPANCY SENSOR & SET TO DIM FIXTURE TO 20% ON A 5 MINUTE TIMER
D1	UNDERCABINET LIGHTING	ALKCO	ARIS-XX-301	LED	LED	3500K DIMMABLE	ELECTRONIC DRIVER	SEE NOTES	SURFACE	SELECT XX=11" (6W), 21"(13W), OR 41" (25W) AS APPROPRIATE TO FIT COUNTER SPACE
G	6" ROUND DOWNLIGHT LED	CREE	KR6-20L-35K-277-10V-KR6T-SSGC-FF	LED	LED	2000K	ELECTRONIC DRIVER	30	RECESSED	PROVIDE LUTRON ECOSYSTEM 0-10V INTERFACE
X	LED EXIT EGRESS	HE WILLIAMS	EXIT/EM-SF-R-WHT	LED	LED	N/A	ELECTRONIC DRIVER	5	SURFACE	
Y	EMERGENCY EGRESS	HE WILLIAMS	EMER-WHT	LED	LED	N/A	ELECTRONIC DRIVER	10.8	SURFACE	

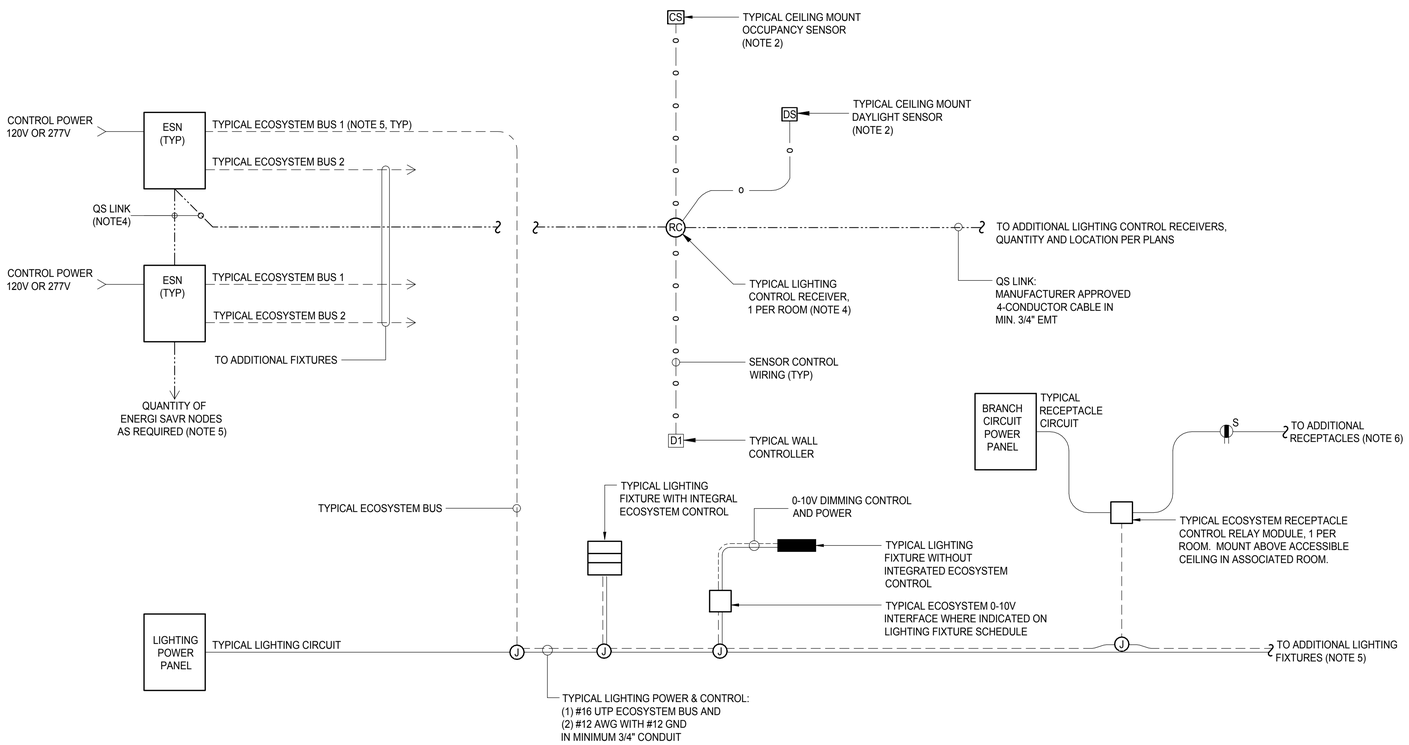

1 ELECTRICAL SWITCHING DIAGRAM
NTS

LINETYPE LEGEND:

- BRANCH LIGHTING CIRCUIT: AS REQUIRED
- ECOSYSTEM DIGITAL BUS: #16 UTP CONTROL CABLE
- QS LINK (MFR 4C CABLE): LUTRON #QSH-CBL-S-500 (LENGTH AS REQUIRED)
- 0-10 VOLT DIMMING CABLE: #16 UTP CONTROL CABLE
- SENSOR WIRING (CL2): LUTRON #C-CBL-522S-WH-1 (LENGTH AS REQUIRED)

GENERAL NOTES:

- ALL WIRING SHALL BE INSTALLED IN CONDUIT, MINIMUM 3/4" EMT.
- ALL SPLICES SHALL BE IN JUNCTION BOXES.

SPECIAL SYMBOLS LEGEND:

- (RC) LIGHTING CONTROL RECEIVER. PROVIDE (1) RECEIVER PER ROOM OR CONTROL AREA. CONNECTS CONTROL DEVICES BACK TO LUTRON ENERGI SAVR NODE(S). LUTRON #QSM2-4W-J
- [D1] DIMMING WALL CONTROLLER WITH 3 BUTTONS (ON/OFF, RAISE/LOWER, PRESET). LUTRON PICO #PX-3BRL-GWH-IO1.PROVIDE WITH STANDARD TWO-SCREW DECORA COVER.
- [D2] TWO 'D1' DIMMING WALL CONTROLLERS GANGED TOGETHER.
- [D3] THREE 'D1' DIMMING WALL CONTROLLERS GANGED TOGETHER.
- [CS] OCCUPANCY SENSOR. LUTRON #LOS-CDT-2000-WH
- [DS] DAYLIGHT SENSOR. LUTRON #C-SR-M1-WH
- [ESN] LUTRON ENERGI SAVR NODE (ESN), QUANTITY AS REQUIRED (NOTE 5). LUTRON #ESN-2CO-S

NUMBERED NOTES:

1. ALL DEVICES SHOWN ARE BASED ON THE LUTRON ECOSYTEM CONTROL SYSTEM.
2. PROVIDE CADDY 512A BRACKET OR EQUIVALENT IN CEILING ABOVE CEILING MOUNTED SENSOR AND FASTEN SENSOR TO BRACKET.
3. CONTROL RECEIVER WILL ACCEPT A MAXIMUM OF FOUR (4) WIRED SENSOR INPUTS. CONTROL RECEIVER WILL ACCEPT A MAXIMUM OF TEN (10) WIRELESS SENSOR INPUTS. MAXIMUM RANGE OF WIRELESS DEVICES IS APPROXIMATELY 30-FEET (DEPENDS ON QUANTITY AND CONSTRUCTION OF OBSTRUCTIVE WALLS).
4. WHEN CONNECTING 'QS LINK' BETWEEN THE ENERGI SAVR NODE PANELS, DO NOT CONNECT THE +24-VOLT WIRE BETWEEN POWER SUPPLIES.
5. MAXIMUM 64 ECOSYSTEM DRIVERS (LED) OR ECOSYSTEM BALLASTS (FLUORESCENT) PER ECOSYSTEM BUS. PROVIDE (4) ENERGI SAVR NODES IN THE ADMIN BUILDING, 2 IN MAINTENANCE, AND 1 IN EACH OF THE REMAINING BUILDINGS.
6. PROVIDE (1) RELAY MODULE PER ROOM IN EACH SPACE CONTAINING SWITCHED RECEPTACLES. PROGRAM ECOSYSTEM INTERFACE TO ACTIVATE SWITCH ON SPACE OCCUPANCY.

DESCRIPTION OF OPERATION:

THE LIGHTING CONTROL RECEIVER CONNECTS CONTROL DEVICES WITHIN THE ROOM BACK TO THE LUTRON ENERGI SAVR NODE(S) VIA THE 'QS LINK'. THE ENERGI SAVR NODE(S) PROCESS THE CONTROL INPUTS AND THEN CONTROL THE OUTPUT OF THE LIGHTING FIXTURES VIA THE 'ECOSYSTEM BUS' CONTROL LINK.

DIMMING WALL CONTROLLERS CONTROL FIXTURES IN THE LOCAL ROOM, UON. OCCUPANCY SENSORS AUTOMATICALLY TURN OFF THE LIGHTS WITHIN A ROOM (OR AREA) AFTER A PERIOD OF UNOCCUPIED TIME. THE DAYLIGHT SENSORS (WHERE PRESENT) AUTOMATICALLY DIM FIXTURES WITHIN THE DAYLIT AREAS (NEAR WINDOWS OR SKYLIGHTS) MAINTAIN A CONSTANT LEVEL OF ILLUMINATION WHILE REDUCING ENERGY USE.

KITCHELL
Capital Expenditure Managers
2750 Gateway Oaks Drive
Suite 300
Sacramento, CA. 95833
(916) 648-9700

BCAG BUTTE COUNTY ASSOCIATION OF GOVERNMENTS

BUTTE REGIONAL TRANSIT OPERATIONS CENTER
326 HUSS LANE, CHICO CA

BUTTE COUNTY ASSOCIATION OF GOVERNMENTS

PROJECT STATUS:
BID SET
BUILDINGS:

SHEET TITLE:
LIGHTING FIXTURES SCHEUDLE & SWITCHING DIAGRAM

SCALE: 0 1/2 1 — BAR IS ONE INCH ON ORIGINAL DRAWING. IF NOT ONE INCH ON THIS SHEET, ADJUST SCALES ACCORDINGLY

REVISIONS

No.	Description	Date

JOB NO. 5006A3
DATE 12/3/15
SHEET E803

LAST REVISION: 11/30/2015 1:59:59 PM

C:\BIM\BCAG TI_homberger.rvt

FIRE ALARM AND VOICE EVACUATION SCOPE OF WORK

THE FIRE ALARM SYSTEM SCOPE OF WORK INCLUDES A NEW FIRE ALARM CONTROL PANEL, EXTENDER PANELS, NEW NOTIFICATION AND INITIATING DEVICES PROVIDING A COMPLETE MANUAL SYSTEM WITH SELECT CODE REQUIRED AUTOMATIC DEVICES.

WHERE REQUIRED, AUTOMATIC DETECTION SHALL CONSIST OF ADDRESSABLE SMOKE OR HEAT DETECTORS PLACED IN REQUIRED AREAS IN ACCORDANCE WITH NFPA 72.

SHEET GENERAL NOTES

1. THE FIRE ALARM ELEMENTS IN THIS DRAWING REPRESENT A PROPOSED SCOPE AND NOT A COMPLETE FIRE ALARM SYSTEM DESIGN. PROVIDE A COMPLETE DESIGN-BUILD SUBMITTAL INCLUDING FINAL DEVICE LOCATIONS, TYPES, WIRING, BATTERY AND VOLTAGE DROP CALCULATIONS FOR FIRE DEPARTMENT REVIEW AND APPROVAL. OBTAIN FIRE DEPARTMENT APPROVAL PRIOR TO BEGINNING CONSTRUCTION.

SEQUENCE OF EVENTS NOTES

ACTIVATION OF AN INITIATING DEVICE (MANUAL PULL STATION, SMOKE DETECTOR, FLOW, OR TAMPER SWITCH) WILL RESULT IN THE FOLLOWING: SOUNDING OF VOICE EVACUATION MESSAGE, FLASHING OF STROBES.

THE AUDIBLE AND VISUAL ALARM SIGNALS CAN BE SILENCED BY ACKNOWLEDGMENT AT THE FIRE ALARM CONTROL PANEL. A SUBSEQUENT ALARM INITIATION AFTER ACKNOWLEDGMENT WILL CAUSE THE PANEL TO REVERT TO THE ALARM CONDITION.

SYSTEM OR WIRING DERANGEMENT WILL RESULT IN A VISUAL AND AUDIBLE TROUBLE SIGNAL AT THE FIRE ALARM CONTROL PANEL.

AFTER SYSTEM ALARM OR SYSTEM TROUBLE CONDITIONS HAVE BEEN CORRECTED, THE SYSTEM MUST BE RESET AT THE CONTROL PANEL TO CLEAR THE VISUAL TROUBLE INDICATIONS ON THE FACE OF THE PANEL.

UPON ALARM ACTIVATION, TROUBLE OR SUPERVISORY CONDITIONS AUTOMATIC FIRE ALARM SYSTEM SHALL TRANSMIT THE ALARM, SUPERVISORY AND TROUBLE SIGNALS TO AN APPROVED SUPERVISING STATION AS REQUIRED BY NFPA 72 AS AMENDED BY ARTICLE 91.

NOTIFICATION APPLIANCE CIRCUITS SHALL BE DESIGNED SO THAT AUDIBLE SIGNAL MAY BE SILENCED WHILE THE VISUAL STROBES CONTINUE TO OPERATE.

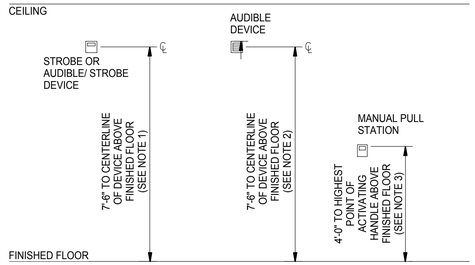

NOTES:

1. THE ACTUAL REQUIREMENT PER NFPA 72 7.5.4.1 READS, "WALL-MOUNTED APPLIANCES SHALL BE MOUNTED SUCH THAT THE ENTIRE LENS IS NOT LESS THAN 2030 MM (80 IN.) AND NOT GREATER THAN 2440 MM (96 IN.) ABOVE THE FINISHED FLOOR OR AT THE MOUNTING HEIGHT SPECIFIED USING THE PERFORMANCE-BASED ALTERNATIVE OF 7.5.4.5." FOR THIS PROJECT MOUNT THE DEVICES AS SHOWN.
2. THE ACTUAL REQUIREMENT PER NFPA 72 7.4.7.1. READS, "IF CEILING HEIGHTS ALLOW, AND UNLESS OTHERWISE PERMITTED BY 7.4.7.2 THROUGH 7.4.7.5, WALL-MOUNTED APPLIANCES SHALL HAVE THEIR TOPS ABOVE THE FINISHED FLOORS AT THE HEIGHTS OF NOT LESS THAN 2290 MM (90 IN.) AND BELOW THE FINISHED CEILINGS AT DISTANCES OF NOT LESS THAN 150 MM (6 IN.)." FOR THIS PROJECT MOUNT THE DEVICES AS SHOWN.
3. THE ACTUAL REQUIREMENTS PER CBC 907.3.2 READS "THE HEIGHT OF THE MANUAL FIRE ALARM BOXES SHALL BE A MINIMUM OF 42 INCHES (1067 MM) AND A MAXIMUM OF 48 INCHES (1219 MM), MEASURED VERTICALLY, FROM THE FLOOR LEVEL TO THE HIGHEST POINT OF THE ACTIVATING HANDLE OR LEAVER OF BOX. MANUAL FIRE ALARM BOXES SHALL ALSO COMPLY WITH SECTION 1117B.6 ITEM 4."

FIRE ALARM AND VOICE EVACUATION SYSTEM NOTES

1. UPON COMPLETION OF THE FIRE PROTECTIVE SIGNALING EQUIPMENT A SATISFACTORY FINAL TEST OF THE ENTIRE SYSTEM SHALL BE MADE IN THE PRESENCE OF THE LOCAL FIRE AUTHORITY WHO SHALL ASSIST/WITNESS SUCH TEST WHEN AVAILABLE. (SEE NOTE 2 BELOW) PART 3-700, TITLE 24 CCR AND SECTION 2-009, CHAPTER 72, TITLE 24 CCR. CONTRACTOR SHALL NOTIFY LOCAL FIRE AUTHORITY OF DATE AND TIME OF FINAL TEST AND PROVIDE A "CERTIFICATE OF COMPLETION" AS PER NFPA 72 SECTION 1-7.21 AND FIG. 1-7.21 TO THE IOR.
2. ENFORCING FIRE AGENCY: LOCAL FIRE DEPARTMENT.
3. SYSTEM NOTIFICATION: SUPERVISING STATION. FIRE ALARM SYSTEMS SHALL TRANSMIT THE ALARM, SUPERVISORY AND TROUBLE SIGNALS TO AN APPROVED SUPERVISING STATION AS REQUIRED BY NFPA 72 AS AMENDED BY ARTICLE 91. THE SUPERVISING STATION SHALL BE LISTED AS EITHER UUFX OR UUUS BY UNDERWRITERS LABORATORY OR SHALL MEET THE REQUIREMENTS OF FACTORY MUTUAL RESEARCH APPROVAL STANDARD 3011.
4. PROVIDE CONDUIT FOR ALL FIRE ALARM WIRING AS FOLLOWS. UNDERGROUND: PVC SCHEDULE 40 WITH ALL PORTIONS BURIED A MINIMUM OF 24" BELOW GRADE. WITHIN BUILDINGS: METAL CONDUIT WITH SET-SCREW STEEL FITTINGS. BUILDING EXTERIOR: METAL CONDUITS WITH WATER TIGHT FITTINGS. (CEC 110-11 AND 300-6). SEE SPECIFICATION SECTION 16050 FOR ADDITIONAL CONDITIONS OF USE FOR CONDUIT INSTALLATION.
5. AUDIBLE DEVICES SHALL BE AT LEAST 15dbA ABOVE AVERAGE AMBIENT SOUND LEVEL BUT NOT LESS THAN 75dbA AT 10' OR MORE THAN 110dbA IN TOTAL, THROUGHOUT. (NFPA72 SEC. 6-3.1 AND CFC1007.3.3.3.3).
6. PROVIDE CALIFORNIA UNIFORM FIRE ALARM SIGNAL IN TEMPORAL MODE - THREE DISTINCTIVE FIRE ALARM SOUNDS, (ANSI S3.41) (PER CFC SEC. 1007.3.3.3.2, NFPA 72 SEC. 3-7.2).
7. VISUAL DEVICES SHALL NOT EXCEED 2 FLASHES PER SECOND AND SHALL NOT BE SLOWER THAN 1 FLASH EVERY SECOND (NFPA 72 SEC. 6-4.2).
8. FIRE ALARM MOUNTING HEIGHTS: SEE FIRE ALARM DEVICE ELEVATION DETAIL.
9. POWER SOURCES TO FIRE ALARM PANELS AND EQUIPMENT SHALL CONSIST OF A 20 AMP 1 POLE DEDICATED CIRCUIT BREAKER IN THE LOCAL POWER PANEL. CIRCUIT AND CONNECTIONS SHALL BE MECHANICALLY PROTECTED. CIRCUIT BEAKER SHALL HAVE A RED MARKING AND BE IDENTIFIED AS "FIRE ALARM CIRCUIT CONTROL."

LIST OF CURRENT CALIFORNIA CODE OF REGULATIONS

APPLICABLE CODES

2010 BUILDING STANDARDS ADMINISTRATIVE CODE, PART 1, TITLE 24 C.C.R.
2013 CALIFORNIA BUILDING CODE (CBC), PART 2, TITLE 24 C.C.R.
(2012 INTERNATIONAL BUILDING CODE VOLUMES 1-2 AND CALIFORNIA AMENDMENTS)
2013 CALIFORNIA ELECTRICAL CODE (CEC), PART 3, TITLE 24 C.C.R.
(2011 NATIONAL ELECTRICAL CODE AND CALIFORNIA AMENDMENTS)
2013 CALIFORNIA MECHANICAL CODE (CMC), PART 4, TITLE 24 C.C.R.
(2012 UNIFORM MECHANICAL CODE AND CALIFORNIA AMENDMENTS)
2013 CALIFORNIA PLUMBING CODE (CPC), PART 5, TITLE 24 C.C.R.
(2012 UNIFORM PLUMBING CODE AND CALIFORNIA AMENDMENTS)
2013 CALIFORNIA FIRE CODE, PART 9, TITLE 24 C.C.R.
(2012 INTERNATIONAL FIRE CODE AND CALIFORNIA AMENDMENTS)
2013 CALIFORNIA REFERENCED STANDARDS, PART 12, TITLE 24 C.C.R.
TITLE 19, C.C.R. PUBLIC SAFETY, STATE FIRE MARSHAL REGULATIONS
FEDERAL AMERICANS WITH DISABILITIES ACT (ADA) GUIDELINES

PARTIAL LIST OF APPLICABLE STANDARDS

NFPA 13 2013 INSTALLATION OF SPRINKLER SYSTEMS
NFPA 14 2013 INSTALLATION OF STANDPIPE AND HOSE SYSTEMS
NFPA 17A 2009 WET CHEMICAL EXTINGUISHING SYSTEMS
NFPA 24 2013 INSTALLATION OF PRIVATE FIRE SERVICE MAINS AND THEIR APPURTANCES
NFPA 72 2013 NATIONAL FIRE ALARM AND SIGNALING CODE (CALIFORNIA AMENDED)
(NOTE: SEE UL STANDARD 1971 FOR "VISUAL DEVICES")

DUCT SMOKE DETECTOR/FSD CONNECTION NOT TO SCALE

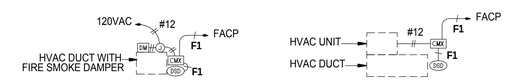

DUCT SMOKE DAMPER USING DUCT SMOKE DETECTOR

HVAC UNIT SHUT DOWN USING DUCT SMOKE DETECTOR

NOTES FOR HVAC UNIT SMOKE DETECTOR INSTALLATION :

1. AT EACH LOCATION DENOTED BY FSD PROVIDE AN ADDRESSABLE SMOKE OR DUCT SMOKE DETECTOR AND ADDRESSABLE CONTROL MODULE
2. FOR EACH FIRE SMOKE DAMPER, PROVIDE 120VAC POWER CIRCUIT FOR CONNECTION TO DAMPER MOTOR AS DEPICTED.

SYMBOLS LEGEND:

- FSD — FIRE SMOKE DAMPER (SEE FIRE ALARM AND MECHANICAL PLANS)
- CMX — CONTROL MODULE (ADDRESSABLE)
- MMX — MONITOR MODULE (ADDRESSABLE)
- SDD — DUCT SMOKE DETECTOR (ADDRESSABLE) (SEE FIRE ALARM AND MECHANICAL PLANS)
- DM — DAMPER MOTOR
- SD — SMOKE DETECTOR

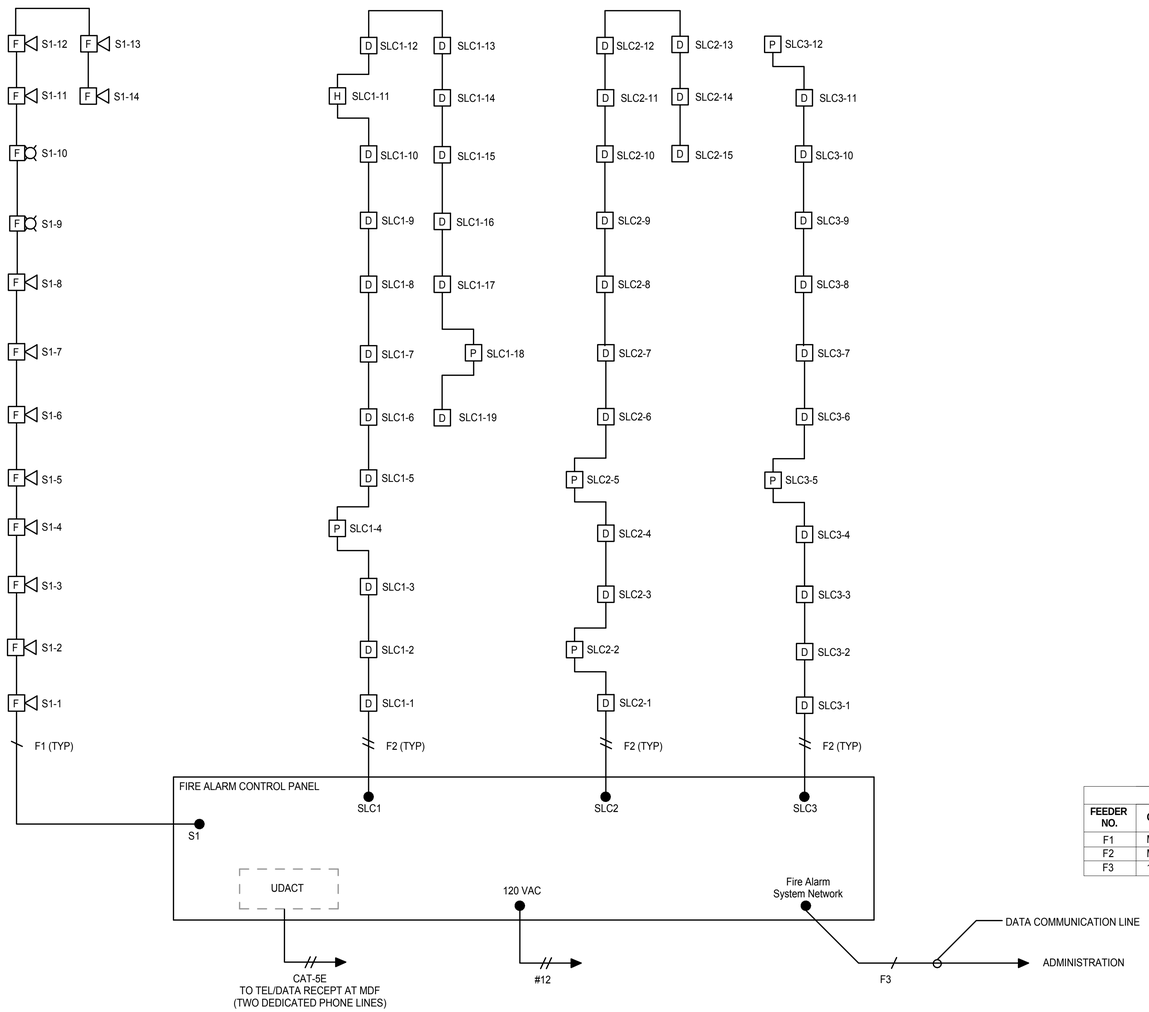

FIRE ALARM CONDUIT AND CABLE SCHEDULE

FEEDER NO.	CONDUIT	WIRE SIZE	MANUFACTURER	SYSTEM	NOTES
F1	MIN 1/2"	#18 AWG TSP TYPE FPL	BELDEN 9574	FIRE ALARM	INSTALL IN CONDUIT
F2	MIN 1/2"	#12 AWG THHN/THWN	GENERIC	FIRE ALARM	INSTALL IN CONDUIT
F3	1-1/4"	CAT-5E	GENERIC		

1 FIRE ALARM RISER DIAGRAM
NTS

LAST REVISION: 11/30/2015 2:00:00 PM

KITCHELL
Capital Expenditure Managers
2750 Gateway Oaks Drive
Suite 300
Sacramento, CA. 95833
(916) 648-9700

BCAG BUTTE COUNTY ASSOCIATION OF GOVERNMENTS

BUTTE REGIONAL TRANSIT OPERATIONS CENTER
326 HUSS LANE, CHICO CA

BUTTE COUNTY ASSOCIATION OF GOVERNMENTS

PROJECT STATUS:
BID SET
BUILDINGS:

SHEET TITLE:
FIRE ALARM DIAGRAM, SCHEDULE & DETAILS

SCALE: 0 1/2 1 BAR IS ONE INCH ON ORIGINAL DRAWING. IF NOT ONE INCH ON THIS SHEET, ADJUST SCALES ACCORDINGLY

REVISIONS

No.	Description	Date

JOB NO. 5006A3
DATE 12/3/15
SHEET E804

C:\BIM\BCAG TI_hornberger.rvt

Branch Panel: LB

Location: OPEN CONF/WORKROOM 117
Supply From: LA
Mounting: Surface
Enclosure: Type 1

Volts: 120/208 Wye
Phases: 3
Wires: 4

A.I.C. Rating:
Mains Type:
Mains Rating: 100 A
MCB Rating: 100 A

Notes:

CKT	Circuit Description	Trip	Poles	A	B	C	A	B	C	Poles	Trip	Circuit Description	CKT
1	EAST BOARD ROOM RECEPTACLES	20 A	1	720 VA			1260 VA			1	20 A	105 & 128 RECEPTACLES	2
3	101 & 102 RECEPTACLES	20 A	1		900 VA			1260 VA		1	20 A	107, 124, 127 RECEPTACLES	4
5	110 & 113 RECEPTACLES	20 A	1			1260 VA			1260 VA	1	20 A	120 & 122 RECEPTACLES	6
7	111 & 112 RECEPTACLES	20 A	1	1260 VA			1080 VA			1	20 A	115 & 116 RECEPTACLES	8
9	109 & 114 RECEPTACLES	20 A	1		1260 VA			1080 VA		1	20 A	116 & 120 RECEPTACLES	10
11	121, 123, 126 RECEPTACLES	20 A	1			1260 VA			1080 VA	1	20 A	119 & 121 RECEPTACLES	12
13	102 & 104 RECEPTACLES	20 A	1	1440 VA			1080 VA			1	20 A	112 RECEPTACLES	14
15	106 & HALL RECEPTACLES	20 A	1		1080 VA			430 VA		2	20 A	FC: 2-2, 2-3, 3-1, 3-2	16
17	112 & 117 RECEPTACLES	20 A	1			720 VA			430 VA	--	--	--	18
19	FC4-1	20 A	2	728 VA			83 VA			2	20 A	CEF-1, CEF-2	20
21	--	--	--		728 VA			83 VA		--	--	--	22
23	SPACE	--	--			0 VA			1500 VA	2	30 A	SERVER RACK 1	24
25	SPACE	--	--	0 VA			1500 VA			--	--	--	26
27	SPACE	--	--		0 VA			1500 VA		2	30 A	SERVER RACK 2	28
29	SPACE	--	--			0 VA			1500 VA	--	--	--	30
31	SPACE	--	--	0 VA			1000 VA			1	20 A	GATE OPERATOR	32
33	SPACE	--	--		0 VA			0 VA		1	20 A	SPARE	34
35	SPACE	--	--			0 VA			0 VA	1	20 A	SPARE	36
37	SPACE	--	--	0 VA			0 VA			1	20 A	SPARE	38
39	SPACE	--	--		0 VA			1000 VA		1	20 A	(E) EXTERIOR LIGHTS	40
41	SPACE	--	--			0 VA			1000 VA	1	20 A	(E) EXTERIOR LIGHTS	42
			Total Load:	10151 VA		9321 VA		10010 VA					
			Total Amps:	85 A		78 A		84 A					

Legend:

Load Classification	Connected Load	Demand Factor	Estimated Demand	Panel Totals	
HVAC	2482 VA	100.00%	2482 VA		
Receptacle	18000 VA	77.78%	14000 VA	**Total Conn. Load:**	29482 VA
Spare	9000 VA	100.00%	9000 VA	**Total Est. Demand:**	25482 VA
				Total Conn.:	82 A
				Total Est. Demand:	71 A

Notes:

Branch Panel: HA

Location:
Supply From:
Mounting: Surface
Enclosure: Type 1

Volts: 480/277 Wye
Phases: 3
Wires: 4

A.I.C. Rating:
Mains Type:
Mains Rating: 200 A
MCB Rating: 200 A

Notes:

CKT	Circuit Description	Trip	Poles	A	B	C	A	B	C	Poles	Trip	Circuit Description	CKT
1	Z2 Lighting Mid-Building (Offices)	20 A	1	3062 VA			455 VA			1	20 A	EXTERIOR LIGHTS	2
3	CU4-1	40 A	3		1377 VA			4191 VA		1	20 A	Z1 LIGHTING BACK BUILDING (BOARD ROOM)	4
5	--	--	--			1377 VA			2903 VA	1	20 A	Z3 LIGHTING FRONT BUILDING (RECEPTION)	6
7	--	--	--	1377 VA			2439 VA			3	40 A	CU1-1	8
9	CU1-2	30 A	3		1755 VA			2439 VA		--	--	--	10
11	--	--	--			1755 VA			2439 VA	--	--	--	12
13	--	--	--	1755 VA			1515 VA			3	25 A	CU2-1	14
15	SPACE	--	--		0 VA			1515 VA		--	--	--	16
17	SPACE	--	--			0 VA			1515 VA	--	--	--	18
19	SPACE	--	--	0 VA			0 VA			--	--	SPACE	20
21	SPACE	--	--		0 VA			0 VA		--	--	SPACE	22
23	SPACE	--	--			0 VA			0 VA	--	--	SPACE	24
25	SPACE	--	--	0 VA			0 VA			--	--	SPACE	26
27	SPACE	--	--		0 VA			0 VA		--	--	SPACE	28
29	SPACE	--	--			0 VA			0 VA	--	--	SPACE	30
31	SPACE	--	--	0 VA			0 VA			--	--	SPACE	32
33	SPACE	--	--		0 VA			0 VA		--	--	SPACE	34
35	SPACE	--	--			0 VA			0 VA	1	20 A	SPARE	36
37	TRANSFORMER TA	125 A	3	17738 VA			0 VA			1	20 A	SPARE	38
39	--	--	--		17131 VA			0 VA		1	20 A	SPARE	40
41	--	--	--			14214 VA			0 VA	1	20 A	SPARE	42
			Total Load:	28341 VA		28408 VA		24203 VA					
			Total Amps:	105 A		105 A		87 A					

Legend:

Load Classification	Connected Load	Demand Factor	Estimated Demand	Panel Totals	
HVAC	32270 VA	100.00%	32270 VA		
Lighting	3992 VA	100.00%	3992 VA	**Total Conn. Load:**	84748 VA
Lighting - Dwelling Unit	6186 VA	66.52%	4115 VA	**Total Est. Demand:**	74537 VA
Other	6820 VA	100.00%	6820 VA	**Total Conn.:**	102 A
Receptacle	26280 VA	69.03%	18140 VA	**Total Est. Demand:**	90 A
Spare	9200 VA	100.00%	9200 VA		

Notes:

Branch Panel: LA

Location: ELECTRICAL 136
Supply From: TA
Mounting: Surface
Enclosure: Type 1

Volts: 120/208 Wye
Phases: 3
Wires: 4

A.I.C. Rating:
Mains Type:
Mains Rating: 200 A
MCB Rating: 200 A

Notes:

CKT	Circuit Description	Trip	Poles	A	B	C	A	B	C	Poles	Trip	Circuit Description	CKT
1	WEST BOARD ROOM RECEPTACLES	20 A	1	1080 VA			1080 VA			1	20 A	STAGE DAIS RECEPTACLES	2
3	AV/ BREAKOUT RECEPTACLES	20 A	1		1260 VA			1080 VA		1	20 A	A/V RECEPTACLES	4
5	BREAKOUT / OVERFLOW ROOM RECEPTACLES	20 A	1			1260 VA			1260 VA	1	20 A	STAGE DAIS 1 RECEPTACLES	6
7	TELEPHONE TERMINAL BACKBOARD...	20 A	1	360 VA			10151 VA			3	100 A	PANEL LB	8
9	FACP	20 A	1		240 VA			9321 VA		--	--	--	10
11	STORAGE RECEPTACLES	20 A	1			1260 VA			10010 VA	--	--	--	12
13	CU3-1	20 A	2	1560 VA			1829 VA			2	20 A	FC6-1	14
15	--	--	--		1560 VA			1829 VA		--	--	--	16
17	FC: 1-1, 1-2, 2-1, 2-4, 5-1	20 A	2			756 VA			200 VA	1	20 A	LIGHTING CONTROL PANEL (LCP)	18
19	--	--	--	756 VA			120 VA			2	20 A	MCU1-1,MCU1-2,MCU3-3,MCU2-4	20
21	PROJECTOR RM 132	20 A	1		1000 VA			120 VA		--	--	--	22
23	PROJECTOR RM 131	20 A	1			1000 VA			200 VA	1	20 A	VRF SYSTEM CONTROL PANEL	24
25	MECHANICAL BLINDS	20 A	1	2000 VA			0 VA			--	--	SPACE	26
27	MOTORIZED SCREENS	20 A	1		2000 VA			0 VA		--	--	SPACE	28
29	SPARE	20 A	1			0 VA			0 VA	--	--	SPACE	30
31	SPARE	20 A	1	0 VA			0 VA			--	--	SPACE	32
33	SPARE	20 A	1		0 VA			0 VA		--	--	SPACE	34
35	SPARE	20 A	1			0 VA			0 VA	--	--	SPACE	36
37							0 VA			--	--	SPACE	38
39								0 VA		--	--	SPACE	40
41									0 VA	--	--	SPACE	42
			Total Load:	18936 VA		18410 VA		15946 VA					
			Total Amps:	161 A		157 A		133 A					

Legend:

Load Classification	Connected Load	Demand Factor	Estimated Demand	Panel Totals	
HVAC	11012 VA	100.00%	11012 VA		
Other	6360 VA	100.00%	6360 VA	**Total Conn. Load:**	52852 VA
Receptacle	26280 VA	69.03%	18140 VA	**Total Est. Demand:**	44712 VA
Spare	9200 VA	100.00%	9200 VA	**Total Conn.:**	147 A
				Total Est. Demand:	124 A

Notes:

KITCHELL
Capital Expenditure Managers
2750 Gateway Oaks Drive
Suite 300
Sacramento, CA. 95833
(916) 648-9700

BCAG BUTTE COUNTY ASSOCIATION OF GOVERNMENTS

BUTTE REGIONAL TRANSIT OPERATIONS CENTER
326 HUSS LANE, CHICO CA

BUTTE COUNTY ASSOCIATION OF GOVERNMENTS

PROJECT STATUS:

BID SET

BUILDINGS:

SHEET TITLE:

ELECTRICAL PANEL SCHEDULES

SCALE: 0 1/2 1 BAR IS ONE INCH ON ORIGINAL DRAWING. IF NOT ONE INCH ON THIS SHEET, ADJUST SCALES ACCORDINGLY

REVISIONS

No.	Description	Date

JOB NO. 5006A3
DATE 12/3/15
SHEET E805

LAST REVISION: 11/30/2015 2:00:01 PM

C:\BIM\BCAG TI_hornberger.rvt

EXTERIOR LIGHTING CONTROL CHANNEL AUTOMATION SCHEDULE

PANEL(S):

CHANNEL	DESCRIPTION	SCHEDULE	ON/OCCUPIED TIME	OFF/OCCUPIED TIME	FLICK WARN	TIME DELAY	DAYLIGHT OVERRIDE
A	DAY TIME WORKING LIGHTS						
B	ADDITIONAL WORKING LIGHTS						
C	STORAGE, OFFICE						
D	BREAKROOM, RESTROOMS						
E	EXTERIOR LIGHTS						

AUTOMATION SCHEDULES:

(1) AUTO ON / AUTO OFF
(2) MANUAL ON / AUTO OFF
(3) DUSK - DAWN
(4) DUSK - AUTO OFF, AUTO-ON, DAWN
(5) ALWAYS ON
(6) MANUAL ON / DAYLIGHT SENSOR / AUTO OFF

INTERIOR LIGHTING CONTROL EQUIPMENT SCHEDULE - DEVICE TYPES

SCHEME TYPE	USAGE	DESCRIPTION
A	GENERAL OFFICE	MANUAL ON, AUTOMATIC OFF AFTER 30 MINUTES OF UNOCCUPIED TIME. DIMMING CONTROL AND DAYLIGHT HARVESTING WERE INDICATED.
B	CONFERENCE ROOM	MANUAL ON, AUTOMATIC OFF AFTER 30 MINUTES OF UNOCCUPIED TIME. DIMMING CONTROL AND DAYLIGHT HARVESTING WERE INDICATED.
C	HALLWAY	MANUAL ON, AUTOMATIC OFF AFTER 30 MINUTES OF UNOCCUPIED TIME. DIMMING CONTROL IS INDICATED.
D	BOARD ROOM	MANUAL ON, AUTOMATIC OFF AFTER 30 MINUTES OF UNOCCUPIED TIME. DIMMING CONTROL IS INDICATED.
E	STORAGE ROOM	MANUAL ON, AUTOMATIC OFF AFTER 15 MINUTES OF UNOCCUPIED TIME.
F	ELECTRICAL ROOM	MANUAL ON, MANUAL OFF
G	BUILDING EXTERIOR LIGHTING	PHOTOCELL ON, TIMECLOCK OFF

INTERIOR LIGHTING CONTROL EQUIPMENT SCHEDULE

CONTROL	DESCRIPTION
OCC	CEILING MOUNTED OCCUPANCY SENSOR, LOW VOLTAGE
WS	WALL SWITCH (SINGLE-POLE OR 3-WAY PER PLANS)
DIM	INTELLIGENT DIMMING WALL CONTROLLER
DS	DAYLIGHT SENSOR
RC	ROOM CONTROLLER
ESN	ENERGI SAVR NODE
W1	WALL OCCUPANCY SENSOR, SINGLE-RELAY
W2	WALL OCCUPANCY SENSOR, DUAL-RELAY

INTERIOR LIGHTING CONTROL EQUIPMENT SCHEDULE

				LIGHTING CONTROLS								NOTES
ROOM #	ROOM NAME	AREA (ft2)	OCCUPANCY TYPE	OCC	WS	DIM	DS	RC	ESN	W1	W2	
-	OVERALL BUILDING	-	-									
-	BUILDING EGRESS LIGHTING	-	-									
-	BUILDING EMERGENCY LIGHTING	-	-									
126	MEN'S ROOM	125		1								
127	WOMEN'S ROOM	122		1								
133	BREAKOUT/CLOSED SESSION ROOM	497		1								
132	A/V ROOM	130		1								
136	ELECTRICAL	56		1								
129	OVERFLOW	478		1								
131	CHAIR STORAGE	124		1								
128	CONFERENCE ROOM	164		1								
105	JANITOR	54		1								
115	OFFICE	Not Placed		1								
123	SERVER ROOM	84		1								
121	OFFICE	97		1								
118	COPY/WORK ROOM	Not Placed		1								
119	OFFICE	Not Placed		1								
124	OFFICE	99		1								
122	OFFICE	99		1								
120	OFFICE	128		1								
114	OFFICE	134		1								
115	OFFICE	85		1								
116	OFFICE	85		1								
109	MGMT OFFICE	153		1								
110	MGMT OFFICE	153		1								
101	LOBBY	408		1								
111	OPEN CONF/WORKROOM	134		1								
112	KITCHEN	172		1								
117	OPEN CONF/WORKROOM	146		1								
102	RECEPTION	109		1								
135	STORAGE	81		1								
104	COPY/WORK ROOM	114		1								
106	OFFICE	134		1								
107	OFFICE	134		1								
119	DIRECTOR OFFICE	126		1								
130	BOARD ROOM	1779		1								
103	HALL	63		1								
108	HALL	194		1								
113	HALL	94		1								
118	HALL	135		1								
125	HALL	198		1								
134	HALL	42		1								
141	DAIS	350		1								

EXTERIOR LIGHTING CONTROL PANEL RELAY SCHEDULE

PANEL NAME: LCP
LOCATION: ELECTRICAL ROOM
ENCLOSURE: NEMA 1
POWER CIRCUIT: LA-18

RELAY NO.	CIRCUIT NO.	LV SWITCH OR SENSOR	DESCRIPTION OF AREA CONTROLLED	AUTOMATION CHANNEL A	B	C	D	E	F	NOTES

KITCHELL
Capital Expenditure Managers
2750 Gateway Oaks Drive
Suite 300
Sacramento, CA. 95833
(916) 648-9700

BCAG BUTTE COUNTY ASSOCIATION OF GOVERNMENTS

BUTTE REGIONAL TRANSIT OPERATIONS CENTER
326 HUSS LANE, CHICO CA

BUTTE COUNTY ASSOCIATION OF GOVERNMENTS

PROJECT STATUS:
BID SET
BUILDINGS:

SHEET TITLE:
ELECTRICAL SCHEDULES

SCALE: 0 1/2 1 BAR IS ONE INCH ON ORIGINAL DRAWING. IF NOT ONE INCH ON THIS SHEET, ADJUST SCALES ACCORDINGLY

REVISIONS

No.	Description	Date

JOB NO. 5006A3
DATE 12/3/15
SHEET E806

C:\BIM\BCAG TI_homberger.rvt

LAST REVISION: 11/30/2015 2:00:03 PM

STATE OF CALIFORNIA
INDOOR LIGHTING
CEC-NRCC-LTI-01-E (Revised 08/15) — CALIFORNIA ENERGY COMMISSION

CERTIFICATE OF COMPLIANCE	NRCC-LTI-01-E
Indoor Lighting	(Page 1 of 6)
Project Name: Butte Regional Transit Operations Center TI	Date Prepared: 11-05-15

A. General Information

Climate Zone:	Conditioned Floor Area : 9446 sqft.			
	Unconditioned Floor Area : 0			
Building Type:	☒ Nonresidential	☐ High-Rise Residential	☐ Hotel/Motel	
☐ Schools	☐ Relocatable Public Schools	☐ Conditioned Spaces	☐ Unconditioned Spaces	
Phase of Construction:	☐ New Construction	☐ Addition	☐ Alteration	
Method of Compliance:	☐ Complete Building	☐ Area Category	☐ Tailored	
Project Address: 326 Huss Lane, Chico, CA				

B. Lighting Compliance Documents (select yes for each document included)

For detailed instructions on the use of this and all Energy Efficiency Standards compliance documents, refer to the Nonresidential Manual published by the California Energy Commission.

YES	NO	FORM	TITLE
✓		NRCC-LTI-01-E	Certificate of Compliance. All Pages required on plans for all submittals.
✓		NRCC-LTI-02-E	Lighting Controls, Certificate of Compliance, and PAF Calculation. All Pages required on plans for all submittals.
✓		NRCC-LTI-03-E	Indoor Lighting Power Allowance
	✓	NRCC-LTI-04-E	Tailored Method Worksheets
	✓	NRCC-LTI-05-E	Line Voltage Track Lighting Worksheets

STATE OF CALIFORNIA
INDOOR LIGHTING
CEC-NRCC-LTI-01-E (Revised 08/15) — CALIFORNIA ENERGY COMMISSION

CERTIFICATE OF COMPLIANCE	NRCC-LTI-01-E
Indoor Lighting	(Page 2 of 6)
Project Name: Butte Regional Transit Operations Center TI	Date Prepared: 11-05-15

C. Summary of Allowed Lighting Power

Conditioned and Unconditioned space Lighting must not be combined for compliance

	Indoor Lighting Power for Conditioned Spaces		Watts		Indoor Lighting Power for Unconditioned Spaces		Watts
1.	**Installed** Lighting NRCC-LTI-01-E, page 4	+	5050		**Installed** Lighting NRCC-LTI-01-E, page 4	+	
2.	PORTABLE ONLY FOR OFFICES NRCC-LTI-01-E, page 3	+	0				
3.	Minus Lighting Control Credits NRCC-LTI-02-E, page 2	-	842		Minus Lighting Control Credits NRCC-LTI-02-E, page 2	-	
4.	Adjusted **Installed** Lighting Power (row 1 plus row 2 minus row 3)	=	4208		Adjusted **Installed** Lighting Power (row 1 minus row 3)	=	
5.	Complies ONLY if **Installed** ≤ **Allowed**				Complies ONLY if **Installed** ≤ **Allowed**		
6.	**Allowed** Lighting Power Conditioned NRCC-LTI-03-E, page 1		7556.8		**Allowed** Lighting Power Unconditioned NRCC-LTI-03-E, page 1		

D. Declaration of Required Installation Certificates

Declare by selecting yes for all Installation Certificates that will be submitted. (Retain copies and verify forms are completed and signed.)

YES	NO	Form/Title	
✓		NRCI-LTI-01-E - Must be submitted for all buildings	☐ Field Inspector
	✓	NRCI-LTI-02-E - Must be submitted for a lighting control system, or for an Energy Management Control System (EMCS), to be recognized for compliance.	☐ Field Inspector
	✓	NRCI-LTI-03-E - Must be submitted for a line-voltage track lighting integral current limiter, or for a supplementary overcurrent protection panel used to energize only line-voltage track lighting, to be recognized for compliance.	☐ Field Inspector
	✓	NRCI-LTI-04-E - Must be submitted for two interlocked systems serving an auditorium, a convention center, a conference room, a multipurpose room, or a theater to be recognized for compliance.	☐ Field Inspector
		NRCI-LTI-05-E - Must be submitted for a Power Adjustment Factor (PAF) to be recognized for compliance.	☐ Field Inspector
	✓	NRCI-LTI-06-E - Must be submitted for additional wattage installed in a video conferencing studio to be recognized for compliance.	☐ Field Inspector

STATE OF CALIFORNIA
INDOOR LIGHTING
CEC-NRCC-LTI-01-E (Revised 08/15) — CALIFORNIA ENERGY COMMISSION

CERTIFICATE OF COMPLIANCE	NRCC-LTI-01-E
Indoor Lighting	(Page 3 of 6)
Project Name: Butte Regional Transit Operations Center TI	Date Prepared: 11-05-15

E. Declaration of Required Certificates of Acceptance

Declare by checking all of the Certificates of Acceptance that will be submitted. (Retain copies and verify forms are completed and signed.)

YES	NO	Form/Title	
✓		NRCA-LTI-02-A - Must be submitted for occupancy sensors and automatic time switch controls.	☐ Field Inspector
✓		NRCA-LTI-03-A - Must be submitted for automatic daylight controls.	☐ Field Inspector
	✓	NRCA-LTI-04-A - Must be submitted for demand responsive lighting controls.	☐ Field Inspector

A separate Lighting Schedule Must Be Filled Out for Conditioned and Unconditioned Spaces. Installed Lighting Power listed on this Lighting Schedule is only for:

■ **CONDITIONED SPACE** ☐ **UNCONDITIONED SPACE**

F. Indoor Lighting Schedule and Field Inspection Energy Checklist

☐ The actual indoor lighting power listed on this page and on the next page includes all installed permanent and planned portable lighting systems.
☐ When Complete Building Method is used for compliance, list each different type of luminaire on separate lines.
☐ When Area Category Method or Tailored Method is used for compliance, list each different type of luminaire by each different function area on separate lines
☐ Also include track lighting in schedule, and submit the track lighting compliance form (NRCC-LTI-05-E) when line-voltage track lighting is installed.

STATE OF CALIFORNIA
INDOOR LIGHTING
CEC-NRCC-LTI-01-E (Revised 08/15) — CALIFORNIA ENERGY COMMISSION

CERTIFICATE OF COMPLIANCE	NRCC-LTI-01-E
Indoor Lighting	(Page 4 of 6)
Project Name: Butte Regional Transit Operations Center TI	Date Prepared: 11-05-15

G. Installed Portable Luminaires in Offices – Exception to Section 140.6(a)

☐ This section shall be filled out ONLY for portable luminaires in offices (As defined in §100.1). All other planned portable luminaires shall be documented on next page of this compliance form.
☐ This section is used to determine if greater than 0.3 watts of portable lighting is planned for any office
☐ Fill out a separate line for each different office. Small offices that are typical (having the same general and portable lighting) may be grouped together. This allowance shall not be traded between offices having different lighting systems.

Office Portable Luminaire Schedule	Office Installed Portable Luminaire Watts Per Square Foot							Office Location	Field Inspector	
1	2	3	4	5	6	7	8	9	10	
Complete Luminaire Description (i.e., LED, under cabinet, furniture mounted direct/indirect)	Watts per Luminaire	Number of Luminaires	Installed portable luminaire watts in this office (G02 x G03)	Square feet of this office	Watts per square foot (G04 / G05)	If F ≤ 0.3, enter zero; if G06 > 0.3, (G06-0.3)	G05 x G07	Identify Office area in which these portable luminaires are installed	Pass	Fail
									☐	☐
									☐	☐
									☐	☐
									☐	☐
									☐	☐
Total installed portable luminaire watts that are greater than 0.3 watts per square foot per office:								Enter sum total of all pages into NRCC-LTI-01-E; Page 1		

STATE OF CALIFORNIA
INDOOR LIGHTING
CEC-NRCC-LTI-01-E (Revised 08/15) — CALIFORNIA ENERGY COMMISSION

CERTIFICATE OF COMPLIANCE	NRCC-LTI-01-E
Indoor Lighting	(Page 5 of 6)
Project Name: Butte Regional Transit Operations Center TI	Date Prepared: 11-05-15

A separate Lighting Schedule Must Be Filled Out for Conditioned and Unconditioned Spaces. Installed Lighting Power listed on this Lighting Schedule is only for:

■ **CONDITIONED SPACE** ☐ **UNCONDITIONED SPACE**

H. INDOOR LIGHTING SCHEDULE and FIELD INSPECTION ENERGY CHECKLIST

Luminaire Schedule		Installed Watts					Location	Field Inspector[1]	
A	B	C	D		E	F	G	H	
Name of Item Tag	Complete Luminaire Description (i.e., 3 lamp fluorescent troffer, F32T8, one dimmable electronic ballast)	Watts per Luminaire	How wattage was determined: CEC Certified (Exceptional)	According to §130.0(c)	Number Luminaires	Total installed Watts in this area (F03 x F05)	Primary Function area in which these luminaires are installed	Pass	Fail
A1	2PL24, 2'X4' LED TROFFER	44	☐	☐	73	3212 W	Office/Hall Illumination	☐	☐
B	CHAIN HLNG 1 X 4 LINEAR LED	44	☐	☐	3	132 W	Storage Illumination	☐	☐
D1	UNDERCABINET LIGHT FIXTURE	13	☐	☐	2	26 W	Reception/ Copy Room Illumination	☐	☐
G	6" ROUND DOWNLIGHT LED	30	☐	☐	56	1680 W	Bathroom/ Boardroom Illumination	☐	☐
			☐	☐				☐	☐
			☐	☐				☐	☐
			☐	☐				☐	☐
			☐	☐				☐	☐
			☐	☐				☐	☐
		INSTALLED WATTS PAGE TOTAL:				5050 W	Enter sum total of all pages into NRCC-LTI-01-E; Page 2		

STATE OF CALIFORNIA
INDOOR LIGHTING
CEC-NRCC-LTI-01-E (Revised 08/15) — CALIFORNIA ENERGY COMMISSION

CERTIFICATE OF COMPLIANCE	NRCC-LTI-01-E
Indoor Lighting	(Page 6 of 6)
Project Name: Butte Regional Transit Operations Center TI	Date Prepared: 11-05-15

DOCUMENTATION AUTHOR'S DECLARATION STATEMENT

1. I certify that this Certificate of Compliance documentation is accurate and complete.

Documentation Author Name: Anthony Lloyd	Documentation Author Signature:
Company: Kitchell	Signature Date[1]: 11-05-15
Address: 2750 Gateway Oaks Dr. #300	CEA Certification Identification (if applicable):
City/State/Zip: Sacramento, CA, 95833	Phone: (916) 648-9700

RESPONSIBLE PERSON'S DECLARATION STATEMENT

I certify the following under penalty of perjury, under the laws of the State of California:
1. The information provided on this Certificate of Compliance is true and correct.
2. I am eligible under Division 3 of the Business and Professions Code to accept responsibility for the building design or system design identified on this Certificate of Compliance (responsible designer).
3. The energy features and performance specifications, materials, components, and manufactured devices for the building design or system design identified on this Certificate of Compliance conform to the requirements of Title 24, Part 1 and Part 6 of the California Code of Regulations.
4. The building design features or system design features identified on this Certificate of Compliance are consistent with the information provided on other applicable compliance documents, worksheets, calculations, plans and specifications submitted to the enforcement agency for approval with this building permit application.
5. I will ensure that a completed signed copy of this Certificate of Compliance shall be made available with the building permit(s) issued for the building, and made available to the enforcement agency for all applicable inspections. I understand that a completed signed copy of this Certificate of Compliance is required to be included with the documentation the builder provides to the building owner at occupancy.

Responsible Designer Name: Milutin Backovich	Responsible Designer Signature:
Company: Kitchell	Date Signed: 11-05-15
Address: 2750 Gateway Oaks Dr. #300	License: E13335
City/State/Zip: Sacramento, CA, 95833	Phone: (916) 648-9700

KITCHELL
Capital Expenditure Managers
2750 Gateway Oaks Drive
Suite 300
Sacramento, CA. 95833
(916) 648-9700

BCAG BUTTE COUNTY ASSOCIATION OF GOVERNMENTS

BUTTE REGIONAL TRANSIT OPERATIONS CENTER
326 HUSS LANE, CHICO CA

BUTTE COUNTY ASSOCIATION OF GOVERNMENTS

PROJECT STATUS:
BID SET
BUILDINGS:

SHEET TITLE:
ELECTRICAL TITLE 24

SCALE: 0 1/2 1 — BAR IS ONE INCH ON ORIGINAL DRAWING. IF NOT ONE INCH ON THIS SHEET, ADJUST SCALES ACCORDINGLY

REVISIONS

No.	Description	Date

JOB NO. 5006A3
DATE 12/3/15
SHEET E901

C:\BIM\BCAG TI_homberger.rvt

LAST REVISION: 11/30/2015 2:00:04 PM

STATE OF CALIFORNIA
INDOOR LIGHTING – LIGHTING CONTROLS
CEC-NRCC-LTI-02-E (Revised 05/15) CALIFORNIA ENERGY COMMISSION

CERTIFICATE OF COMPLIANCE	NRCC-LTI-02-E
Indoor Lighting - Lighting Controls	(Page 1 of 3)
Project Name: Butte Regional Transit Operations Center TI	Date Prepared: 11-05-15

The NRCC-LTI-02-E shall be used to document all mandatory and prescriptive lighting controls that are applicable to the project.

A. Mandatory Lighting Control Declaration Statements (Indicate if the measure applies by checking yes or no below.)

YES	NO	Control Requirements
✓		Lighting shall be controlled by self-contained lighting control devices which are certified to the Energy Commission according to the Title 20 Appliance Efficiency Regulations in accordance with Section 110.9.
✓		Lighting shall be controlled by a lighting control a system or energy management control system in accordance with §110.9. An Installation Certificate shall be submitted in accordance with Section 130.4(b).
	✓	One or more Track Lighting Integral Current Limiters shall be installed which have been certified to the Energy Commission in accordance with §110.9 and §130.0. Additionally, an Installation Certificate shall be submitted in accordance with Section 130.4(b).
	✓	A Track Lighting Supplementary Overcurrent Protection Panel shall be installed in accordance with Section 110.9 and Section 130.0. Additionally, an Installation Certificate shall be installed in accordance with Section 130.4(b).
✓		All lighting controls and equipment shall comply with the applicable requirements in §110.9 and shall be installed in accordance with the manufacturer's instructions in accordance with Section 130.1.
✓		All luminaires shall be functionally controlled with manually switched ON and OFF lighting controls in accordance with Section 130.1(a).
✓		General lighting shall be separately controlled from all other lighting systems in an area. Floor and wall display, window display, case display, ornamental, and special effects lighting shall each be separately controlled on circuits that are 20 amps or less. When track lighting is used, general, display, ornamental, and special effects lighting shall each be separately controlled; in accordance with Section 130.1(a)4.
✓		The general lighting of any enclosed area 100 square feet or larger, with a connected lighting load that exceeds 0.5 watts per square foot shall meet the multi-level lighting control requirements in accordance with Section 130.1(b).
✓		All installed indoor lighting shall be equipped with controls that meet the applicable Shut-OFF control requirements in Section 130.1(c).
✓		Lighting in all Daylit Zones shall be controlled in accordance with the requirements in Section 130.1(d) and daylit zones are shown on the plans.
	✓	Lighting power in buildings larger than 10,000 square feet shall be capable of being automatically reduced in response to a Demand Responsive Signal in accordance with Section 130.1(e).
✓		Before an occupancy permit is granted for a newly constructed building or area, or a new lighting system serving a building, area, or site is operated for normal use, indoor lighting controls serving the building, area, or site shall be certified as meeting the Acceptance Requirements for Code Compliance in accordance with Section 130.4.(a). The controls required to meet the Acceptance Requirements include automatic daylight controls, automatic shut-OFF controls, and demand responsive controls.

STATE OF CALIFORNIA
INDOOR LIGHTING – LIGHTING CONTROLS
CEC-NRCC-LTI-02-E (Revised 05/15) CALIFORNIA ENERGY COMMISSION

CERTIFICATE OF COMPLIANCE	NRCC-LTI-02-E
Indoor Lighting - Lighting Controls	(Page 2 of 3)
Project Name: Butte Regional Transit Operations Center TI	Date Prepared: 11-05-15

A separate document must be filled out for Conditioned and Unconditioned Spaces. This page is used only for the following:
■ CONDITIONED SPACES ☐ UNCONDITIONED SPACES

B. Mandatory and Prescriptive Indoor Lighting Control Schedule, PAF Calculation, and Field Inspection Checklist

Lighting Control Schedule			Standards Complying With [1] (✓ all that apply, or enter 'X' if Exempted)							PAF Credit Calculation [2]			✓ Acceptance Test Required	Field Inspector	
										Warrant per Building	PAF	Control Credit (K x L)			
A	B	C	D	E	F	G	H	I	J	K	L	M	N	O	
Location in Building	Type/ Description of Lighting Control (i.e.: occupancy sensor, automatic time switch, dimmer, automatic daylight, etc...)	# of Units	§130.1(a)	§130.1(b)	§130.1(c)	§130.1(d)	§130.1(e)	§130.1(f)	§130.1(g)					Pass	Fail
Offices	Occupancy Sensors	33	✓	✓	✓					3212	.20	642.4		☐	☐
Rooms w/ Large Glass Window	Automatic Daylight Sensors	6	✓	✓	✓	✓				158	.20	31.6		☐	☐
Board Room	Dimmer	31	✓	✓	✓					1680	.10	168		☐	☐
														☐	☐
														☐	☐
														☐	☐
														☐	☐
Control Credit PAGE TOTAL (Sum of Column M):												842			
IF MULTIPLE PAGES ARE USED, ENTER SUM TOTAL OF Control Credit for all pages HERE (Sum of all Column M):															
													Enter Control Credit total into NRCC-LTI-01-E; Page 1.		

1. §130.1(a) = Manual area controls; §130.0(b) = Multi Level; §130.1(c) = Auto Shut-Off; §130.1(d) = Mandatory Daylight; §130.1(e) = Demand Responsive; §140.6(d) = Additional lighting controls installed to earn a PAF; §140.6(d) = Prescriptive Secondary Sidelit Daylight Controls.
2. Check Table 140.6-A for correct Factor. PAFs shall not be traded between conditioned and unconditioned spaces. As a condition to earn a PAF, an Installation Certificate is also required to be filled out, signed, and submitted.

STATE OF CALIFORNIA
INDOOR LIGHTING – LIGHTING CONTROLS
CEC-NRCC-LTI-02-E (Revised 05/15) CALIFORNIA ENERGY COMMISSION

CERTIFICATE OF COMPLIANCE	NRCC-LTI-02-E
Indoor Lighting - Lighting Controls	(Page 3 of 3)
Project Name: Butte Regional Transit Operations Center TI	Date Prepared: 11-05-15

DOCUMENTATION AUTHOR'S DECLARATION STATEMENT
1. I certify that this Certificate of Compliance documentation is accurate and complete.

Documentation Author Name: Anthony Lloyd	Documentation Author Signature:
Company: Kitchell	Signature Date: 11-05-15
Address: 2750 Gateway Oaks Dr. #300	CEA Certification Identification (if applicable):
City/State/Zip: Sacramento, CA, 95833	Phone: (916) 648-9700

RESPONSIBLE PERSON'S DECLARATION STATEMENT
I certify the following under penalty of perjury, under the laws of the State of California:
1. The information provided on this Certificate of Compliance is true and correct.
2. I am eligible under Division 3 of the Business and Professions Code to accept responsibility for the building design or system design identified on this Certificate of Compliance (responsible designer).
3. The energy features and performance specifications, materials, components, and manufactured devices for the building design or system design identified on this Certificate of Compliance conform to the requirements of Title 24, Part 1 and Part 6 of the California Code of Regulations.
4. The building design features or system design features identified on this Certificate of Compliance are consistent with the information provided on other applicable compliance documents, worksheets, calculations, plans and specifications submitted to the enforcement agency for approval with this building permit application.
5. I will ensure that a completed signed copy of this Certificate of Compliance shall be made available with the building permit(s) issued for the building, and made available to the enforcement agency for all applicable inspections. I understand that a completed signed copy of this Certificate of Compliance is required to be included with the documentation the builder provides to the building owner at occupancy.

Responsible Designer Name: Milutin Backovich	Responsible Designer Signature:
Company: Kitchell	Date Signed: 11-05-15
Address: 2750 Gateway Oaks Dr. #300	License: E13335
City/State/Zip: Sacramento, CA, 95833	Phone: (916) 648-9700

STATE OF CALIFORNIA
INDOOR LIGHTING POWER ALLOWANCE
CEC-NRCC-LTI-03-E (Revised 05/15) CALIFORNIA ENERGY COMMISSION

CERTIFICATE OF COMPLIANCE	NRCC-LTI-03-E
Certificate of Compliance - Indoor Lighting Power Allowance	(Page 1 of 4)
Project Name: Butte Regional Transit Operations Center TI	Date Prepared: 11-05-15

A separate page must be filled out for Conditioned and Unconditioned Spaces. This page is only for:
■ CONDITIONED spaces ☐ UNCONDITIONED spaces

A. SUMMARY TOTALS OF LIGHTING POWER ALLOWANCES
■ If using Complete Building Method for compliance, use only the total in column (a) as total allowed building watts.
☐ If using Area Category Method, Tailored Method, or a combination of Area Category and Tailored Method for compliance, use only the total in column (b) as the total allowed building watts

	(a)		(b)
1. Complete Building Method Allowed Watts. Documented in section B of NRCC-LTI-03-E (below on this page)	7556.8 W		
2. Area Category Method Allowed Watts. Documented in section C-1 of NRCC-LTI-03-E (below on this page)			
3. Tailored Method Allowed Watts. Documented in section A of NRCC-LTI-04-E			
TOTAL ALLOWED BUILDING WATTS. Enter number into correct cell on NRCC-LTI-01, Page 2, Row 1	7556.8 W		

☐ Check here if building contains both conditioned and unconditioned areas.

B. COMPLETE BUILDING METHOD LIGHTING POWER ALLOWANCE

1	2		3		4
TYPE OF BUILDING (From §140.6 Table 140.6-B)	WATTS PER (ft^2)	X	COMPLETE BLDG. AREA	=	ALLOWED WATTS
Office Building	0.8		9446 sqft.		7556.8 W
		Total Area:	9446 sqft.		7556.8 W
Total Watts. Enter Total Watts into section A, row 1 (Above on this page)					7556.8 W

C-1 AREA CATEGORY METHOD TOTAL LIGHTING POWER ALLOWANCES (D plus E)	Watts
Total from section C-2	
Total from section C-3	
Total Watts. Enter Total Watts into section A, row 2 (Above on this page)	

STATE OF CALIFORNIA
INDOOR LIGHTING POWER ALLOWANCE
CEC-NRCC-LTI-03-E (Revised 05/15) CALIFORNIA ENERGY COMMISSION

CERTIFICATE OF COMPLIANCE	NRCC-LTI-03-E
Certificate of Compliance - Indoor Lighting Power Allowance	(Page 2 of 4)
Project Name: Butte Regional Transit Operations Center TI	Date Prepared: 11-05-15

A separate page must be filled out for Conditioned and Unconditioned Spaces. This page is only for:
☐ CONDITIONED spaces ☐ UNCONDITIONED spaces

C-2 AREA CATEGORY METHOD GENERAL LIGHTING POWER ALLOWANCE
☐ Do not include portable lighting for offices. Portable lighting for offices shall be documented only in section B of NRCC-LTI-03-E.
☐ Separately list lighting for each primary function area as defined in §100.1 of the Standards.

A		B		C		D
AREA CATEGORY (From §140.6 Table 140.6-C)		WATTS PER (ft^2)	X	AREA (ft^2)	=	ALLOWED WATTS
Location in Building	Primary Function Area per Table 140.6-C					

PLUMBING ABBREVIATIONS

SYMBOL	DESCRIPTION
A	COMPRESSED AIR
ABC	ABOVE CEILING
AD	AREA DRAIN
AFF	ABOVE FINISHED FLOOR
AFG	ABOVE FINISHED GRADE
AFP	ABOVE FINISHED PAVEMENT
ASH	AUTOMATIC SPRINKLER HEAD
AV	ACID VENT
AW	ACID WASTE ABOVE GRADE OR FLOOR
BAV	BALL VALVE
BEL	BELOW
BFF	BELOW FINISHED FLOOR
BFG	BELOW FINISHED GRADE
BFV	BUTTERFLY VALVE
BLDG	BUILDING
BV	BALANCING VALVE
CB	CATCH BASIN
CD	CONDENSATE PIPING
CHO	CHASSIS OIL
CLG	CEILING
CO, WCO	CLEAN OUT, WALL CLEANOUT
CONN	CONNECT/CONNECTION
CONT	CONTINUATION
CSP	COMBINATION STANDPIPE
CW	COLD WATER
CWH	COLD WATER HEADER
CWV	COMBINED WASTE AND VENT
(D)	DROP
DA	DENTAL AIR
DF	DRINKING FOUNTAIN
DIA	DIAMETER
DIA	DIAMETER
DN	DOWN
DSP	SRY STANDPIPE
DV	DENTAL VACUUM
DW	DISHWASHER
DWG	DRAWING
(E)	EXISTING
EL	ELEVATION
ELEC	ELECTRICAL
EQUIP	EQUIPMENT
EWC	ELECTRIC WATER COOLER
/FT	PER FOOT
F	FIRE SERVICE
FA	FROM ABOVE
FB	FROM BELOW
FC	FLEXIBLE CONNECTOR
FCO	FLOOR CLEANOUT
FD	FLOOR DRAIN
FDC	FIRE DEPARTMENT CONNECTION
FFE	FINISHED FLOOR ELEVATION
FH	FIRE HYDRANT
FHC	FIRE HOSE CABINET
FHR	FIRE HOSE RACK
FHV	FIRE HOSE VALVE
FLR	FLOOOR
FS	FLOOR SINK
FSR	FIRE SPRINKLER RISER
FSW	FLOW SWITCH
FTK	FLUSH TANK
FU	FIXTURE UNIT
FV	FLUSH VALVE
FW	FIRE WATER
G	LOW PRESSURE GAS
GAL	GALLONS
GCO	GRADE CLEANOUT
GLV	BLOVE VALVE
GPM	GALLONS PER MINUTE
GPR	GAS PRESSURE REGULATOR
GV/VB	GATE VALVE IN VALVE BOX
GW	GREASE WASTE BELOW GRADE OR FLOOR
H	HALON
HB	HOSE BIBB
HH	HALON UNDERFLOOR SPACE
HPG	HIGH PRESSURE GAS
HR	HOUR
HS	HANK SINK
HT	HEIGHT
HTR	HEATER
HW	HOT WATER
HWR	HOT WATER RETURN
ICW	INDUSTRIAL COLD WATER
IE	INVERT ELEVATION
IW	INDIRECT WASTE
KEC	KITCHEN EQUIPMENT CONTRACTOR
KS	KITCHEN SINK
MECH	MECHANICAL
MO	MOTOR OIL
MPG	MEDIUM PRESSURE GAS
MTD	MOUNTED
(N)	NEW
NTS	NOT TO SCALE
OD	OVERFLOW DRAIN
OFCI	OWNER FURNISHED, CONTRACTOR INSTALLED
OFL	OVERFLOW LEADER ABOVE GRADE
OFOI	OWNER FURNISHED, OWNER INSTALLED
OH	OVERHEAD
OR	ON ROOF
OS & Y	OUTSIDE SCREW AND YOKE
PD	PUMP DISCHARGE
PG	PRESSURE GAUGE
PH	PHASE
PLBG	PLUMBING
PLD	PLANTER DRAIN
PO	PLUGGED OUTLET
POC	POINT OF CONNECTION
PRS	PRE-RINSE SINK
PRV	PRESSURE RELIEF VALVE
PS	POT SINK
PSW	PRESSURE SWITCH
(R)	RISER, RISE
RD	ROOF DRAIN
REC	RECESSED
REQD	REQUIRED
REV	REVISION
RM	ROOM
RWL	RAIN WATER LEADER ABOVE GRADE OR FLOOR
SA/WHA	SHOCK ABSORBER / WATER HAMMER ARRESTOR
SCW	SOFT COLD WATER
SHW	SOFT HOT WATER
SOV	SHUT OFF VALVE
SP	STANDPIPE
SPD	FIRE SPRINKLER DRAIN
SPEC	SPECIFICATION
SS	STAINLESS STEEL / SERVICE SINK / SANITARY SEWER
SSD	SUB SOIL DRAIN
STD	STANDARD
STR	STRAINER
STRUC	STRUCTURAL
SW	SOFTENED WATER
(TA)	TO ABOVE
(TB)	TO BELOW
T	THERMOMETER
TEMP	TEMPERATURE
TMV	THERMOSTATIC MIXING VALVE
TOC	TOP OF CONCRETE
TP	TRAP PRIMER, TRAP
TPRV	TEMPERATURE AND PRESSURE RELIEF VALVE
TW	TEMPERED WATER
TYP	TYPICAL
UF	URINAL
UG	UNDERGROUND
UL	UNDERWRITERS' LABORATORIES
UR	URINAL
US	UNDER SLAB
V(R)	VENT (RISER)
VB	VALVE BOX
VCP	VITRIFIED CLAY PIPE
VTR	VENT THRU ROOF
W	WASTE
W	WET STAND PIPE
W/	WITH
W/O	WITHOUT
WC	WATER CLOSET
WD	WASTE OIL DRAINAGE
WF	WASH FOUNTAIN
WH	WATER HEATER
WHA	WATER HAMMER ARRESTOR
WOR	WASTE OIL RECOVER
WOV	WASTE OIL VENT

PLUMBING SYMBOLS

SYMBOL	DESCRIPTION
	PIPE RISER
	PIPE DROP
Ø	FCO (FLOOR CLEANOUT)
	WATER HEATER
‡	HOSE BIBB
CW	COLD WATER
HW	HOT WATER
SS	SANITARY SEWER
G	GAS

DESCRIPTION	SYMBOL	DESCRIPTION
MATCH LINE	1 / M101A 1 / M101B	VIEW NUMBER / SHEET NUMBER SHADED PORTION IS SIDE CONSIDERED
VIEW REFERENCE	1 XXXX	VIEW NUMBER SHEET NUMBER
SECTION	X XXXX	SECTION IDENTIFIER SHEET NUMBER
EQUIPMENT TAG (PLANS)	GWH 1	EQUIPMENT TYPE EQUIPMENT NUMBER
EQUIPMENT TAG (SCHEDULES & DIAGRAMS)	WC3-4	EQUIPMENT TYPE - NUMBER
FIXTURE TAG	WC-1	FIXTURE TYPE - NUMBER
POINT OF CONNECTION		
POINT OF DISCONNECT		

FIXTURE CONNECTIONS (INCHES)

FIXTURE	SYMB.	VENT	WASTE		COLD WATER		HOT WATER	
			BRANCH	OUTLET	BRANCH	OUTLET	BRANCH	OUTLET
WATER CLOSET (FV)	WC	2	4	4	1-1/4	1	-	-
URINAL WALL	UR	1-1/2	2	2	1	3/4	-	-
LAVATORY	LV	1-1/2	2	1-1/2	3/4	1/2	3/4	1/2
MOP SINK, 3"	MS	2	3	3	3/4	3/4	3/4	3/4
KITCHEN SINK	KS	2	3	3	3/4	3/4	3/4	3/4
FLOOR DRAIN 3"	FD	2	3	3	-	-	-	-
TRAP PRIMER	TP	-	-	-	1/2	1/2	-	-
HOSE BIBB	HB	-	-	-	3/4	3/4	-	-
DRINKING FOUNTAIN	DF	1-1/2	2	1-1/2	3/4	1/2	-	-

CA GREEN BUILDING STANDARD

1. PLUMBING FIXTURES WILL BE INSTALLED THAT REDUCE THE WATER CONSUMPTION BY 20% PER THE CALCULATION BELOW. (CGBS 5.410.2, A5.303.2.3.3).
2. PLUMBING FIXTURES WILL BE INSTALLED THAT REDUCE THE WASTEWATER PRODUCTION BY 20% (CGBS 5.303.4).
3. ALL PLUMBING FIXTURES AND FITTINGS SHALL MEET THE STANDARDS REFERENCED IN TABLE 5.303.6 BELOW. (CGBS 5.303.6)

TABLE 5.303.6
STANDARDS FOR PLUMBING
FIXTURES AND FIXTURE FITTINGS

REQUIRED STANDARDS	
WATER CLOSETS (TOILETS) - FLUSHOMETER VALVE TYPE SINGLE FLUSH, MAXIMUM FLUSH VOLUME.	ASME A 112.19.2 CSA B45.1-1.28 GAL (4.8 L)
WATER CLOSETS (TOILETS) - FLUSHOMETER VALVE TYPE DUAL FLUSH, MAXIMUM FLUSH VOLUME.	ASME A 112.19.14 AND US EPA WATERSENSE TANK-TYPE HIGH-EFFICIENCY TOILET SPECIFICATION -1.28 GAL (4.8 L)
WATER CLOSETS (TOILETS) - TANK-TYPE	US EPA WATERSENSE TANK-TYPE HIGH-EFFICIENCY TOILET SPECIFICATION
URINALS, MAXIMUM FLUSH VOLUME	ASME A 112.19.2 CSA B45.1-0.5 GAL (1.9 L)
URINALS, NONWATER URINALS	ASME A 112.19.19 (VITREOUS CHINA) ANSI Z124.9-2004 OR IAPMO Z124.9 (PLASTIC)
PUBLIC LAVATORY FAUCETS: MAXIMUM FLOW RATE - 0.5 GPM (1.0 L) PER METERING CYCLE	ASME A 112.18.1 / CSA B125.1
PUBLIC METERING SELF-CLOSING FAUCETS: MAXIMUM WATER USE - 0.25 GAL (1.0L) PER METERING CYCLE	ASME A 112.18.1 / CSA B125.1
RESIDENTIAL BATHROOM LAVATORY SINK FAUCETS: MAXIMUM FLOW RATE - 1.5 GPM (5.7 L/MIN)	ASME A 112.18.1 / CSA B125.1

GAS WATER HEATER SCHEDULE

MFG	MODEL	TANK CAPACITY (GAL.)	INPUT (BTU/HR)	RECOVERY GPH @ 80 °F	DIAMETER	HEIGHT	WEIGHT	NOTES
A.O. SMITH	BT-80	74	75,100	91	26.5"	58.5"	893	

PLUMBING FIXTURE SCHEDULE

TAG	DESCRIPTION	MANUFACTURER	MODEL NO.	FLOW RATE	NOTES
WC-1	WATER CLOSET SEAT	KOHLER KOHLER	K-4325 K-4731-C	1.28 GPF -	SLOAN 8111 ECOS HE FLUSHOMETER, BATTERY POWERED WADE 310 SERIES CLOSET CARRIER
UR-1	URINAL	KOHLER	K-4904-ET	0.125 GPF	SLOAN 8186 ECOS HE FLUSHOMETER, BATTERY POWERED WADE 400 UNIVERSAL CARRIER WITH HANGER PLATE
L-1	LAVATORY FAUCET	KOHLER SLOAN	K-2196 EFX-250.500.0000	0.5 GPF	DEARBORN BRASS 760-1 OVERFLOW PLUG, 704-1 P-TRAP WATTS 389 412TV TANK SUPPLY KIT
TP-1	TRAP PRIMER	SLOAN	VBF-72-A	1.28 GPF	VACUUM BREAKER TRAP PRIMER INCLUDES HIGH BACK PRESSURE VACUUM BREAKER
HB-1	HOSE BIBB	WOODFORD	74	--	NON-FREEZING ANTI-SIPHON PROTECTED WALL HYDRANT CHROME EXTERIOR FINISH
KS-1	KITCHEN SINK FAUCET	ELKAY CHICAGO	LRAD3722 2302-E35ABCP	1.5 GPM	6" DEPTH DOUBLE COMPARTMENT SINK, WATTS 389 412TV TANK SUPPLY KIT DEARBORN BRASS L7 STRAINER, 704-1 P-TRAP
MS-1	MOP SINK FAUCET	KOHLER ZURN	K-6710 Z843M1-CS-WHK-5H	2.25 GPM	WITH K-8940 COATED WIRE RIM GUARD, K-9146 STRAINER
DF-1	DRINKING FOUNTAIN	HAWS	H1119.8	0.5 GPM	CHILLED DUAL WALL MOUNT DRINKING FOUNTAIN REQUIRES CHILLER MODEL HCR8 AND MOUNTING FRAME MODEL MTGFR.LG
FD-1	FLOOR DRAIN	ZURN	Z-415-B	--	SLOAN VBF-72-A1 TRAP PRIMER
FCO	FLOOR CLEANOUT	ZURN	Z1400-BZ	--	

GENERAL NOTES:

1. ALL WORK SHALL COMPLY WITH ALL APPLICABLE CODES, SPECIFICATIONS, STATE ORDINANCES AND INDUSTRY STANDARDS.
2. SEISMIC RESTRAINT: ALL HUNG PIPING SHALL CONFORM TO THE FOLLOWING CONDITIONS AND, THEREFORE, SEISMIC RESTRAINTS MAY BE OMITTED ACCORDING TO 2013 CBC AND ASCE 7-10.
   1. FUEL PIPING 1" AND LESS.
   2. ALL PIPING EXCEPT FUEL PIPING, 2-1/2" AND LARGER MUST BE SUSPENDED BY INDIVIDUAL HANGERS 12" OR IN LENGTH FROM THE TOP TO THE BOTTOM OF THE ATTACHMENT TO STRUCTURE.
   3. NO TRAPEZE ASSEMBLIES SHALL BE USED TO SUPPORT PIPES OR DUCTS.
   4. WHERE LATERAL, RESTRAINTS ARE OMITTED, PIPING AND DUCTS SHALL BE INSTALLED SUCH THAT LATERAL MOTION OF THE PIPING OR DUCT WILL NOT CAUSE DAMAGE IMPACT WITH OTHER SYSTEMS OR STRUCTURAL MEMBERS, OR LOSS OF VERTICAL SUPPORT.
3. ALL INSULATION AND SEALING PRODUCTS USED IN THE BUILDING SHALL HAVE A SURFACE BURING CHARACTERISTIC WITH FLAME SPREAD/SMOKE DEVELOPED INDEX OF 25/50 MAXIMUM, WHEN TESTED AS COMPOSITE INSTALLATION INCLUDING INSULATION, TAPES FACING MATERIALS, JACKETS AND ADHESIVES.
4. THE ANNULAR SPACE BETWEEN PIPE SLEEVES AND THE PIPE THROUGH ALL RATED WALLS AND FLOORS SHALL BE FIRESTOPPED. FIRESTOPPING OF ALL PIPE PENETRATIONS SHALL COMPLY WITH U.L. REQUIREMENTS. MANUFACTURER PREAPPROVED UL PENETRATION FOR PIPE MATERIAL AND SURFACE PENETRATED SHALL BE USED. PENETRATIONS SHALL BE 3M, PROSET, OR APPROVED EQUAL. SUBMIT SHOP DRAWINGS.
5. COORDINATE THE FOLLOWING WITH ARCHITECTURAL, STRUCTURAL, PLUMBING AND ELECTRICAL DRAWINGS AND ELEMENTS AS INSTALLED, INCLUDING EXISTING BUILDING SYSTEMS.

   A. EXACT LOCATION OF ALL EQUIPMENT.
   B. ALL PENETRATIONS THRU ROOF, WALLS AND FLOORS.
   C. EXACT SIZE AND ROUTING OF PIPING.
6. ALL PIPING LOCATED IN WALLS OR ABOVE CEILING HAVING SHUT/OFF VALVES OR OTHER DEVICES REQUIRING ACCESS FOR OPERATION OR MAINTENANCE SHALL BE PROVIDED WITH ACCESS DOORS OF ADEQUATE SIZE FOR SERVICE.
7. ANY DAMAGE TO EXISTING BUILDINGS ARCHITECTURAL, STRUCTURAL, MECHANICAL, AND ELECTRICAL SYSTEMS THAT OCCURS DURING THE WORK SHALL BE RESTORED TO THE ORIGINAL CONDITION AT THE CONTRACTOR'S EXPENSE.
8. LOCATIONS, SIZES AND DEPTHS SHOWN FOR ALL EXISTING UTILITIES AND EQUIPMENT SHOWN ARE APPROXIMATE ONLY. CONTRACTOR SHALL FIELD VERIFY THE EXACT SIZE, LOCATION AND ADEQUACY OF DEPTH OF ALL EXISTING UTILITIES AND/OR EQUIPMENT SHOWN TO BE CONNECTED TO PRIOR TO BEGINNING WORK.
9. ALL CONTRACTOR'S SHALL VISIT THE SITE PRIOR TO BIDDING TO SURVEY EXISTING FIELD CONDITIONS. AFTER THE CONTRACTOR IS AWARDED THE CONTRACT,THE CONTRACTOR SHALL SURVEY EXISTING FIELD CONDITIONS IN DETAIL.

KITCHELL
Capital Expenditure Managers
2750 Gateway Oaks Drive
Suite 300
Sacramento, CA. 95833
(916) 648-9700

BCAG BUTTE COUNTY ASSOCIATION OF GOVERNMENTS

BUTTE REGIONAL TRANSIT OPERATIONS CENTER
326 HUSS LANE, CHICO CA

BUTTE COUNTY ASSOCIATION OF GOVERNMENTS

PROJECT STATUS:

BID SET

BUILDINGS:

SHEET TITLE:

PLUMBING ABBREVIATIONS, SYMBOLS & NOTES

SCALE: 0 1/2 1 BAR IS ONE INCH ON ORIGINAL DRAWING. IF NOT ONE INCH ON THIS SHEET, ADJUST SCALES ACCORDINGLY

REVISIONS

No.	Description	Date

JOB NO. 5006A3

DATE 12/3/15

SHEET P001

LAST REVISION: 11/30/2015 2:00:27 PM

C:\BIM\BCAG TI_hornberger.rvt

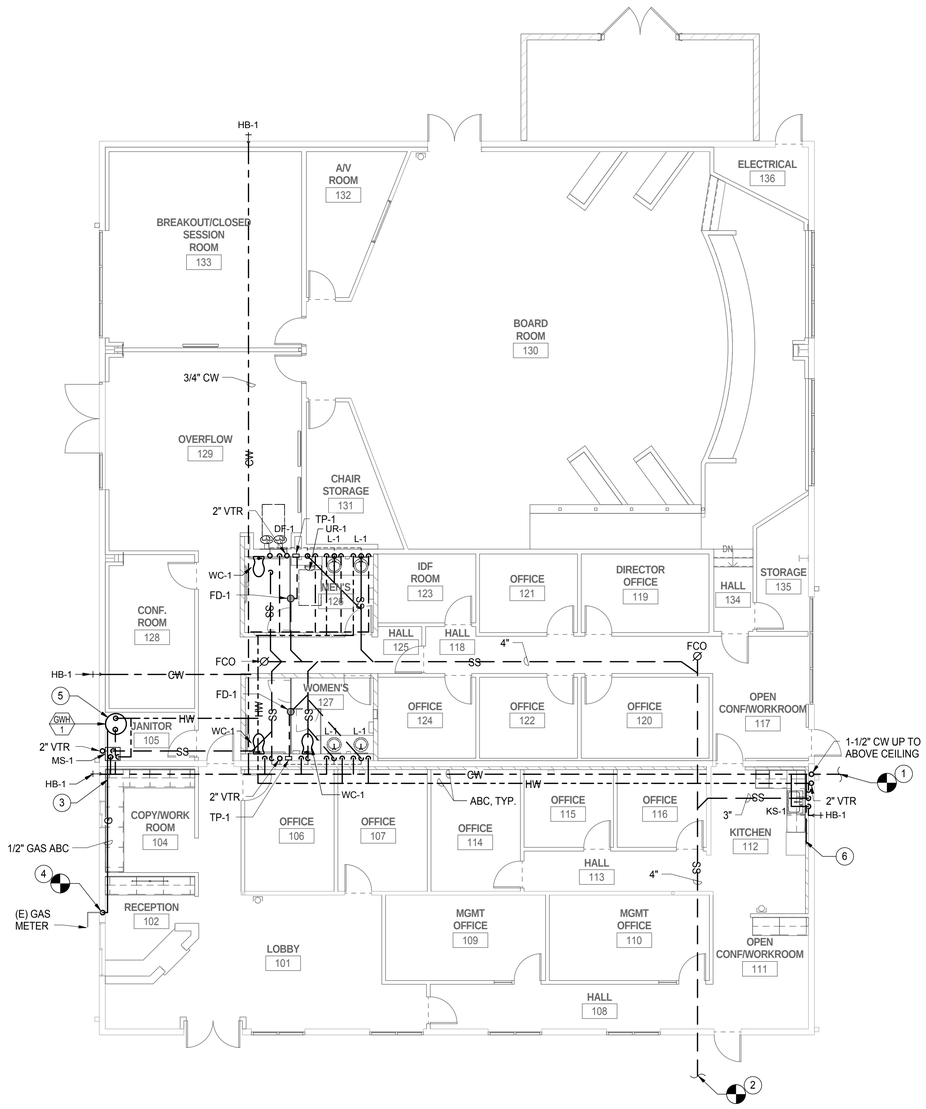

1 PLUMBING PLAN
1/8" = 1'-0"

KEYNOTES

1. CONNECT 1-1/2" CW TO EXISTING CW LINE OUTSIDE OF BUILDING. FIELD VERIFY POINT OF CONNECTION.
2. CONNECT 4" SS TO EXISTING SS LINE OUTSIDE OF BUILDING. FIELD VERIFY POINT OF CONNECTION.
3. CONNECT 1/2" GAS TO GWH-1 WITH SHUT-OFF GAS VALVE AND 6" LONG DIRT LEG AS SHOWN IN DETAIL 2/P201.
4. CONNECT 1/2" GAS TO (E) GAS LINE.
5. PROVIDE COMBINATION FLUE VENT AND COMBUSTION AIR INTAKE PER MANUFACTURER RECOMMENDATIONS. SEE ROOF PLAN A230 FOR ROOF TERMINATION.
6. FURNISH AND INSTALL ICE MAKER BOX WITH HAMMER ARRESTOR. PRECISION PLUMBING PRODUCT MODEL MM-500 PIMB. CONNECT COLD WATER (CW) LINE.

GENERAL NOTES:

1. PLUMBING PIPES SHOWN OUT OF WALL FOR CLARITY PURPOSES.
2. EXISTING PLUMBING PIPE LOCATIONS ARE ESTIMATE FROM FIELD SURVEY, CONTRACTOR SHALL VISIT THE SITE TO VERIFY ALL EXISTING CONDITIONS PRIOR TO SHOP DRAWING PREPARATION.
3. ALL PIPING LOCATED IN WALLS OR ABOVE CEILING HAVING SHUT OFF VALVES OR OTHER DEVICES REQUIRING ACCESS FOR OPERATION OR MAINTENANCE SHALL BE PROVIDED WITH ACCESS DOORS OF ADEQUATE SIZE FOR SERVICE.
4. DESIGN DRAWINGS ARE DIAGRAMMATIC AND DO NOT SHOW ALL OFFSETS, BENDS, ELBOWS AND OTHER ELEMENTS THAT MAY BE REQUIRED. THE DRAWINGS SHOW THE GENERAL ARRANGEMENT OF EQUIPMENT, PIPE, ETC., AND SHALL BE FOLLOWED AS CLOSELY TO THE ACTUAL BUILDING CONSTRUCTION AND THE WORK FROM OTHER TRADES SHALL PERMIT. CONTRACTOR WILL PROVIDE ALL NECESSARY ACCESSORIES REQUIRED FOR A COMPLETE INSTALLATION.
5. FOR SAW CUTTING EXISTING SLAB, SEE AD201.

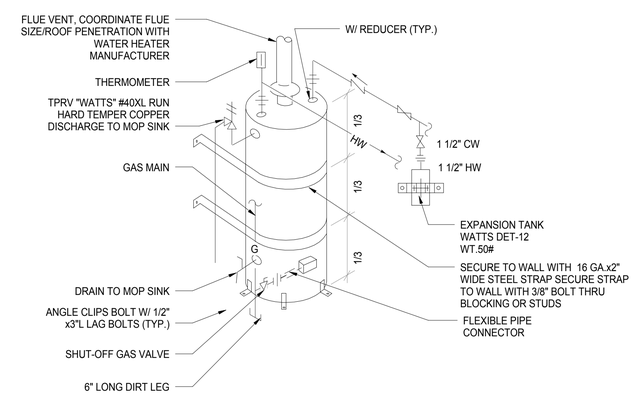

NOTES:

1. OFFSET FLUE TO CLEAR COMB. AIR DUCTS AND CAP.
2. ALLOW SPACE/CLEARANCE FOR MAIN WATER LINE AND GAS WITHIN THE ROOM.
3. ALLOW FOR 24" SERVICE CLEARANCE AT SERVICEABLE PARTS

2 GAS WATER HEATER DETAIL
NTS

KITCHELL
Capital Expenditure Managers
2750 Gateway Oaks Drive
Suite 300
Sacramento, CA. 95833
(916) 648-9700

BCAG BUTTE COUNTY ASSOCIATION OF GOVERNMENTS

BUTTE REGIONAL TRANSIT OPERATIONS CENTER
326 HUSS LANE, CHICO CA

BUTTE COUNTY ASSOCIATION OF GOVERNMENTS

PROJECT STATUS:
BID SET
BUILDINGS:

SHEET TITLE:
PLUMBING FLOOR PLAN WITH PLUMBING FIXTURES LOCATED

SCALE: 0 1/2 1 BAR IS ONE INCH ON ORIGINAL DRAWING. IF NOT ONE INCH ON THIS SHEET, ADJUST SCALES ACCORDINGLY

REVISIONS

No.	Description	Date

JOB NO. 5006A3
DATE 12/3/15
SHEET P201

C:\BIM\BCAG TI_hornberger.rvt

LAST REVISION: 11/30/2015 2:00:28 PM